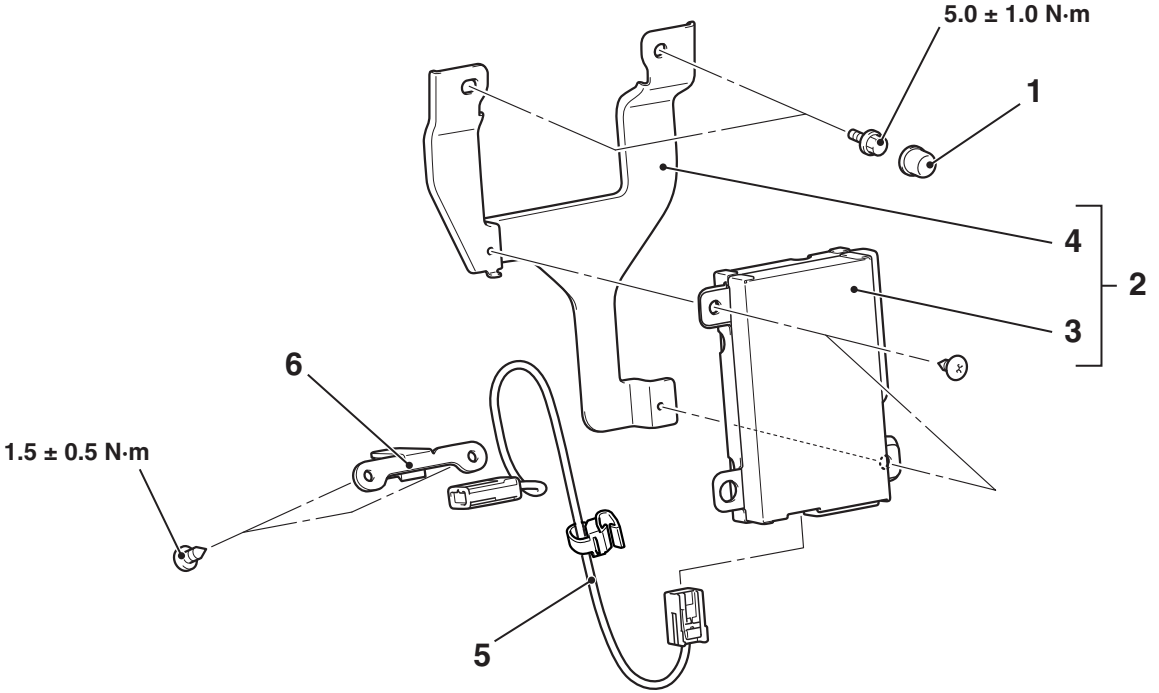

ACF04184AB