<Vehicles with except GCC>

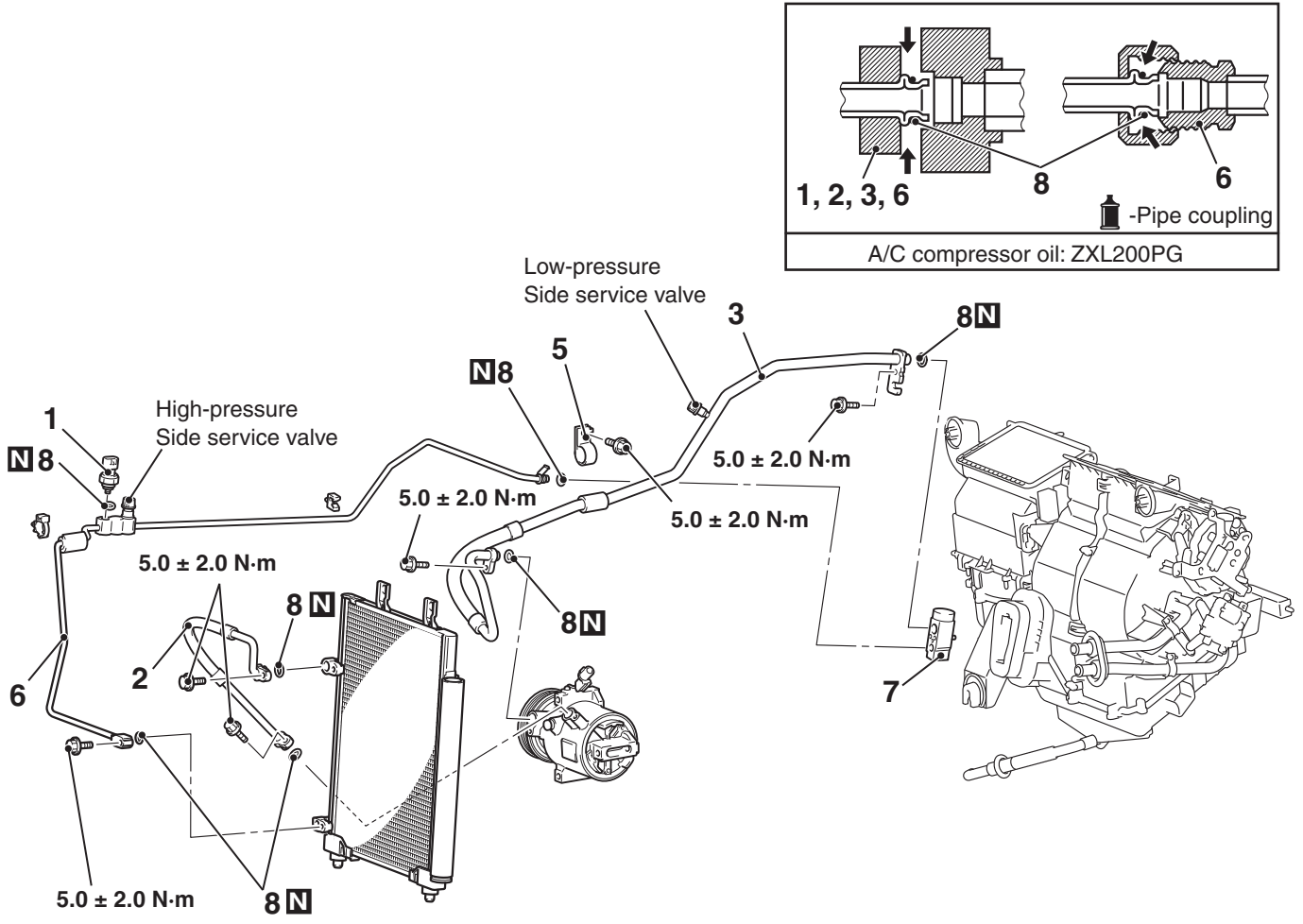

ACF03397AB