Relay box in engine compartment

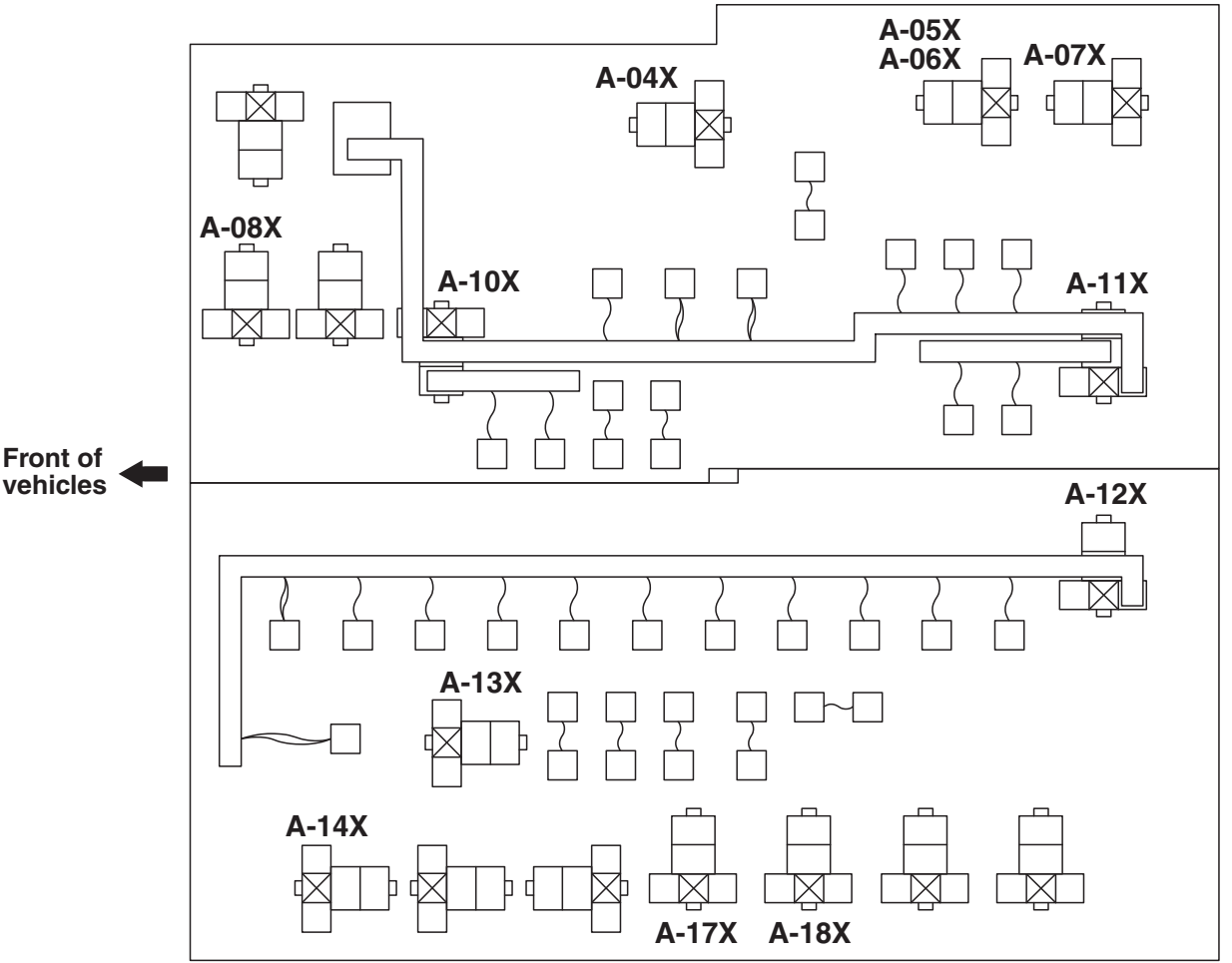

ACB02937AG