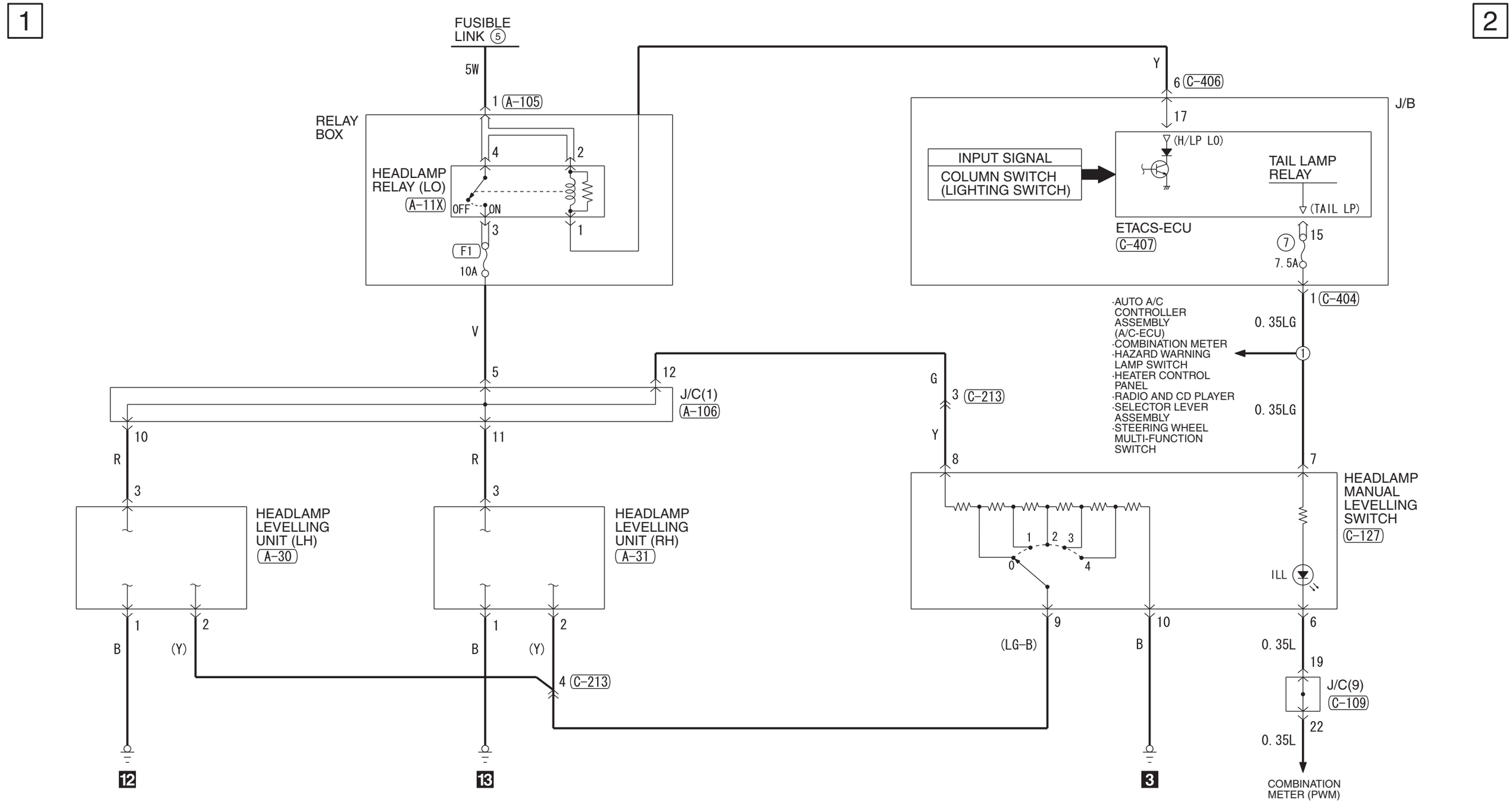
1
2
FUSIBLE LINK (5)
5W
1 (A-105)
RELAY BOX
HEADLAMP RELAY (LO)
(A-11X)
OFF
ON
4
2
3
1
F1
10A
V
5
12
J/C(1)
(A-106)
10
11
R
R
3
3
HEADLAMP LEVELLING UNIT (LH)
(A-30)
HEADLAMP LEVELLING UNIT (RH)
(A-31)
1
2
1
2
B
(Y)
B
(Y)
4 (C-213)
12
13
Y
6 (C-406)
17
J/B
INPUT SIGNAL
COLUMN SWITCH (LIGHTING SWITCH)
(H/LP LO)
TAIL LAMP RELAY
(TAIL LP)
ETACS-ECU
(C-407)
7
15
7. 5A
1 (C-404)
·AUTO A/C CONTROLLER ASSEMBLY (A/C-ECU)
·COMBINATION METER
·HAZARD WARNING LAMP SWITCH
·HEATER CONTROL PANEL
·RADIO AND CD PLAYER
·SELECTOR LEVER ASSEMBLY
·STEERING WHEEL MULTI-FUNCTION SWITCH
0. 35LG
0. 35LG
G
3 (C-213)
Y
8
7
HEADLAMP MANUAL LEVELLING SWITCH
(C-127)
1
2
3
0
4
ILL
9
10
6
(LG-B)
B
0. 35L
19
J/C(9)
(C-109)
22
0. 35L
3
COMBINATION METER (PWM)
(A-11X)
(A-30)
(A-31)
(A-105)
MU801401
(A-106)
(MU801852)
(C-109)
(C-127)
(C-213)
MU801515
(C-404)
MU801839
(C-406)
MU801867
(C-407)
J/B SIDE
Wire colour code
B : Black LG : Light green G : Green L : Blue W : White Y : Yellow SB : Sky blue BR : Brown
O : Orange GR : Grey R : Red P : Pink V : Violet PU : Purple SI : Silver BE : Beige

HGNJ0X06AC