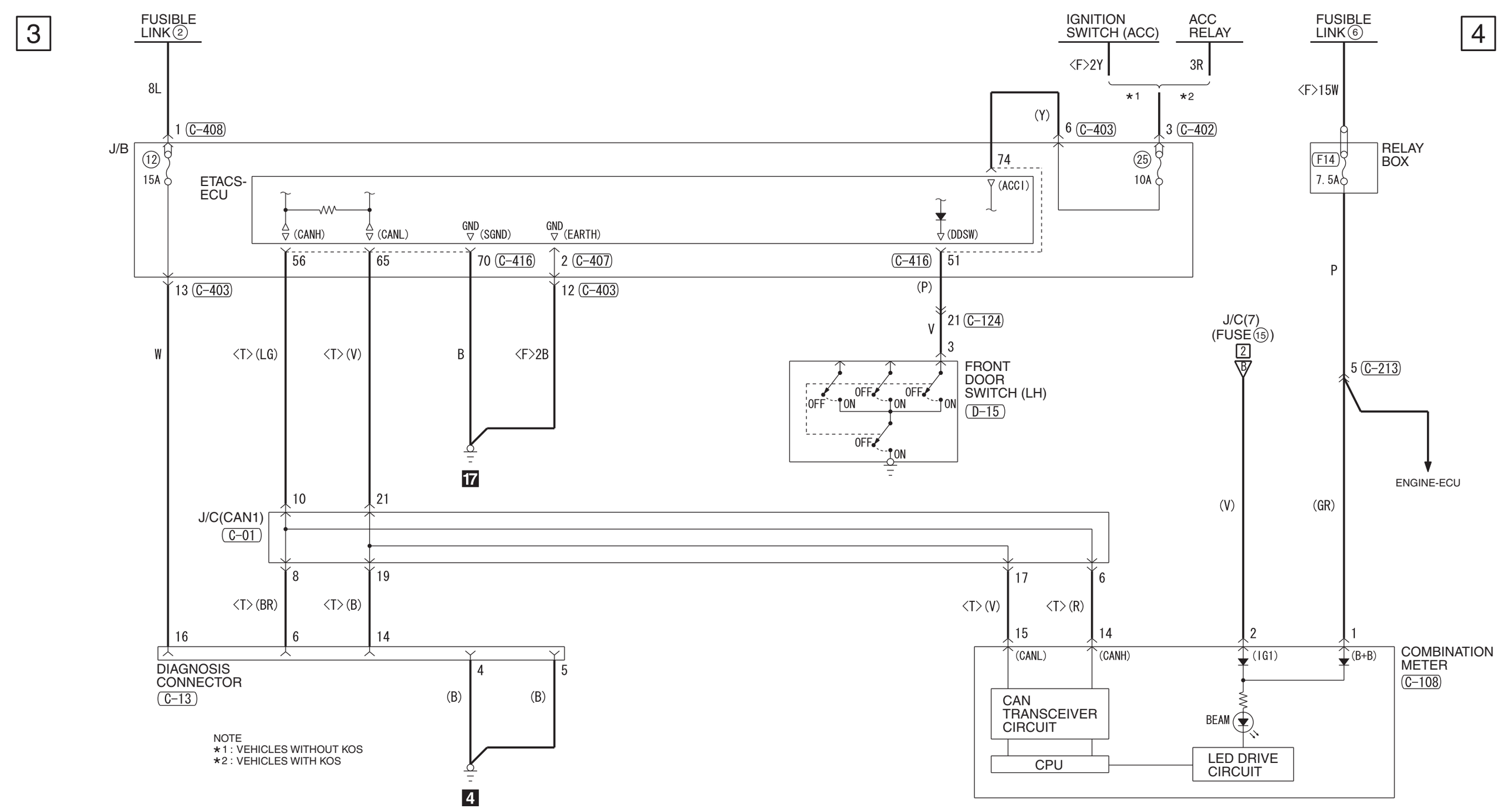
3
4
FUSIBLE LINK ②
8L
1 C-408
J/B
12
15A
ETACS-ECU
(CANH)
(CANL)
GND (SGND)
GND (EARTH)
(DDSW)
(ACCI)
56
65
70 C-416
2 C-407
C-416
51
13 C-403
12 C-403
W
<T> (LG)
<T> (V)
B
<F>2B
17
IGNITION SWITCH (ACC)
ACC RELAY
<F>2Y
3R
*1
*2
(Y)
6 C-403
3 C-402
74
25
10A
FUSIBLE LINK ⑥
<F>15W
RELAY BOX
F14
7.5A
P
(P)
21 C-124
V
3
FRONT DOOR SWITCH (LH)
D-15
OFF
ON
J/C(7) (FUSE ⑮)
2
B
5 C-213
ENGINE-ECU
(V)
(GR)
J/C(CAN1)
C-01
10
21
8
19
17
6
<T> (BR)
<T> (B)
<T> (V)
<T> (R)
16
6
14
15
14
2
1
DIAGNOSIS CONNECTOR
C-13
4
5
(B)
(B)
4
(CANL)
(CANH)
(IG1)
(B+B)
COMBINATION METER
C-108
CAN TRANSCEIVER CIRCUIT
CPU
BEAM
LED DRIVE CIRCUIT
NOTE
*1 : VEHICLES WITHOUT KOS
*2 : VEHICLES WITH KOS
C-01
MU801515
C-13
FRONT SIDE
MU803797
C-108
AMP
C-124
MU801515
C-213
MU801515
C-402
C-403
MU801857
C-407
J/B SIDE
C-408
MU801401
C-416
(MU803766)
D-15
(MU801536)
Wire colour code
B : Black LG : Light green G : Green L : Blue W : White Y : Yellow SB : Sky blue
BR : Brown O : Orange GR : Grey R : Red P : Pink V : Violet PU : Purple SI : Silver
ACE00817AB