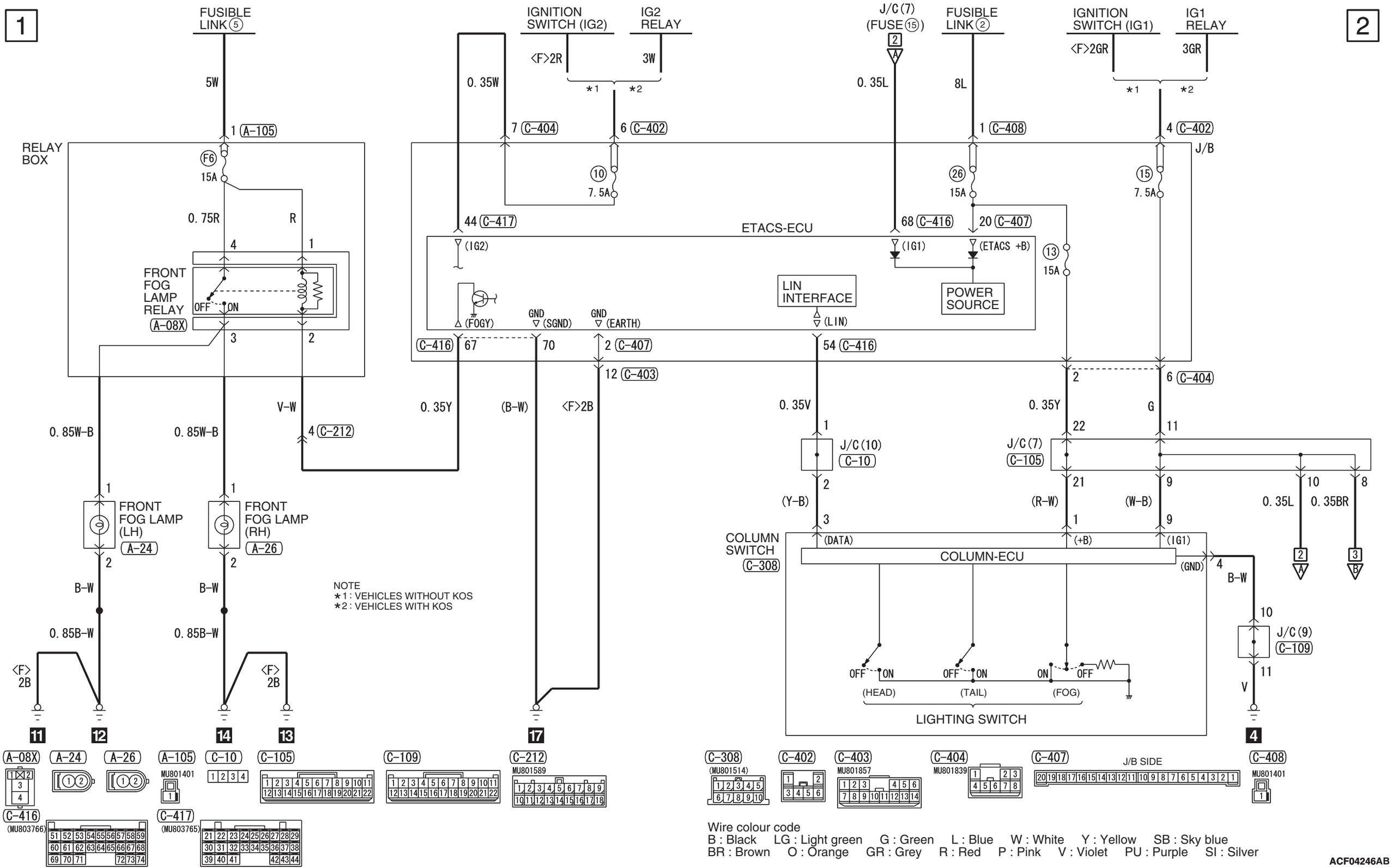
1
2
FUSIBLE LINK (5)
IGNITION SWITCH (IG2)
IG2 RELAY
J/C (7) (FUSE (15))
FUSIBLE LINK (2)
IGNITION SWITCH (IG1)
IG1 RELAY
<F>2R
3W
<F>2GR
3GR
5W
0. 35W
0. 35L
8L
*1
*2
1 (A-105)
7 (C-404)
6 (C-402)
1 (C-408)
4 (C-402)
RELAY BOX
F6
15A
10
7. 5A
26
15A
15
7. 5A
J/B
0. 75R
R
44 (C-417)
68 (C-416)
20 (C-407)
ETACS-ECU
(IG2)
(IG1)
(ETACS +B)
13
15A
FRONT FOG LAMP RELAY
(A-08X)
OFF
ON
LIN INTERFACE
POWER SOURCE
(FOGY)
GND (SGND)
GND (EARTH)
(LIN)
(C-416) 67
70
2 (C-407)
54 (C-416)
12 (C-403)
2
6 (C-404)
V-W
0. 35Y
(B-W)
<F>2B
0. 35V
0. 35Y
G
4 (C-212)
22
11
J/C (10)
(C-10)
J/C (7)
(C-105)
0. 85W-B
0. 85W-B
21
9
10
8
(Y-B)
(R-W)
(W-B)
0. 35L
0. 35BR
FRONT FOG LAMP (LH)
(A-24)
FRONT FOG LAMP (RH)
(A-26)
COLUMN SWITCH
(C-308)
(DATA)
(+B)
(IG1)
COLUMN-ECU
(GND)
B-W
B-W
NOTE
*1 : VEHICLES WITHOUT KOS
*2 : VEHICLES WITH KOS
0. 85B-W
0. 85B-W
J/C (9)
(C-109)
<F> 2B
<F> 2B
OFF
ON
(HEAD)
(TAIL)
(FOG)
LIGHTING SWITCH
V
11
12
14
13
17
4
(A-08X)
(A-24)
(A-26)
(A-105)
(C-10)
(C-105)
(C-109)
(C-212)
MU801401
MU801589
(C-416)
(MU803766)
(C-417)
(MU803765)
(C-308)
(MU801514)
(C-402)
(C-403)
MU801857
(C-404)
MU801839
(C-407)
J/B SIDE
(C-408)
MU801401
Wire colour code
B : Black LG : Light green G : Green L : Blue W : White Y : Yellow SB : Sky blue
BR : Brown O : Orange GR : Grey R : Red P : Pink V : Violet PU : Purple SI : Silver
ACF04246AB