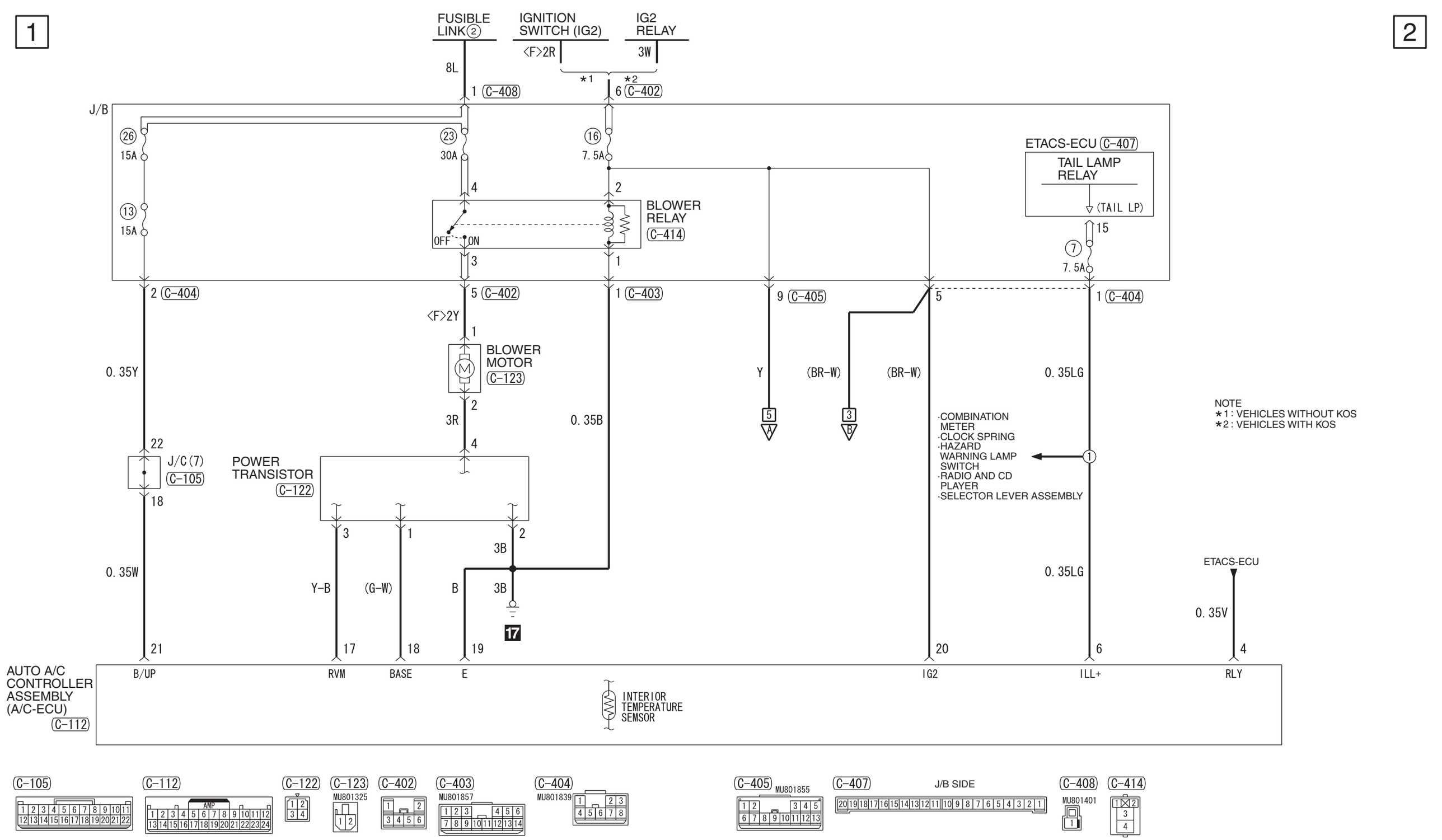
1
2
FUSIBLE LINK ②
IGNITION SWITCH (IG2)
IG2 RELAY
<F>2R
3W
8L
*1
*2
1 (C-408)
6 (C-402)
J/B
26
15A
23
30A
16
7.5A
13
15A
4
2
BLOWER RELAY
(C-414)
OFF
ON
3
1
ETACS-ECU (C-407)
TAIL LAMP RELAY
(TAIL LP)
15
7
7.5A
2 (C-404)
5 (C-402)
1 (C-403)
9 (C-405)
5
1 (C-404)
<F>2Y
1
BLOWER MOTOR
(C-123)
0.35Y
Y
(BR-W)
(BR-W)
0.35LG
2
3R
0.35B
5
A
3
B
·COMBINATION METER
·CLOCK SPRING
·HAZARD WARNING LAMP SWITCH
·RADIO AND CD PLAYER
·SELECTOR LEVER ASSEMBLY
1
22
J/C (7)
(C-105)
4
POWER TRANSISTOR
(C-122)
18
3
1
2
3B
0.35W
Y-B
(G-W)
B
3B
17
0.35LG
ETACS-ECU
0.35V
21
17
18
19
20
6
4
AUTO A/C CONTROLLER ASSEMBLY (A/C-ECU)
(C-112)
B/UP
RVM
BASE
E
IG2
ILL+
RLY
INTERIOR TEMPERATURE SEMSOR
NOTE
*1 : VEHICLES WITHOUT KOS
*2 : VEHICLES WITH KOS
(C-105)
(C-112)
AMP
(C-122)
(C-123)
MU801325
(C-402)
(C-403)
MU801857
(C-404)
MU801839
(C-405)
MU801855
(C-407)
J/B SIDE
(C-408)
MU801401
(C-414)
Wire colour code
B : Black LG : Light green G : Green L : Blue W : White Y : Yellow SB : Sky blue
BR : Brown O : Orange GR : Grey R : Red P : Pink V : Violet PU : Purple SI : Silver
ACF05431AB