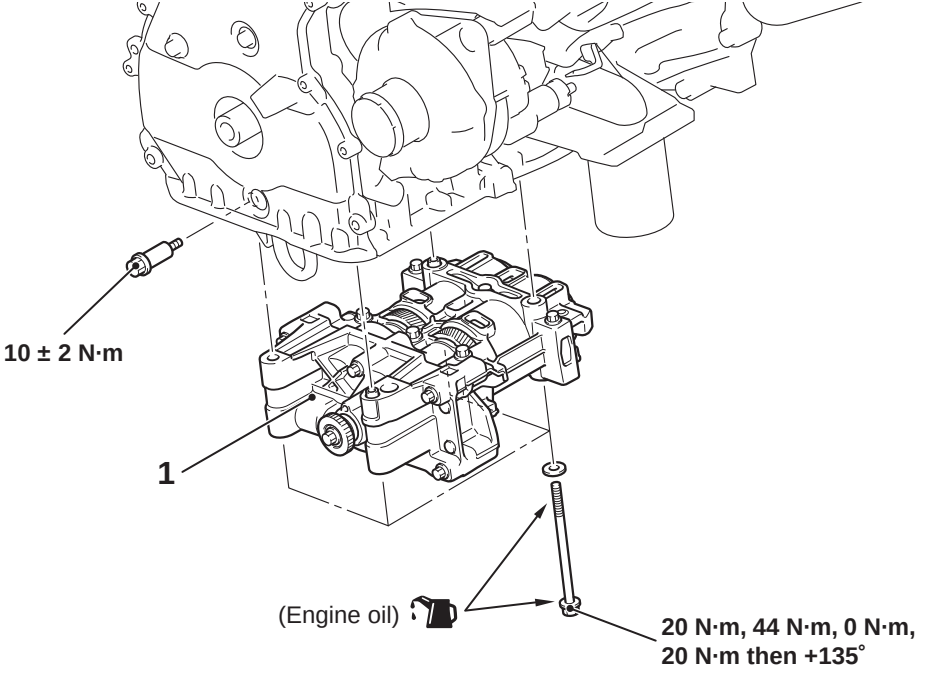
10 ± 2 N·m
1
(Engine oil)
20 N·m, 44 N·m, 0 N·m,
20 N·m then +135°
AC509274 AG