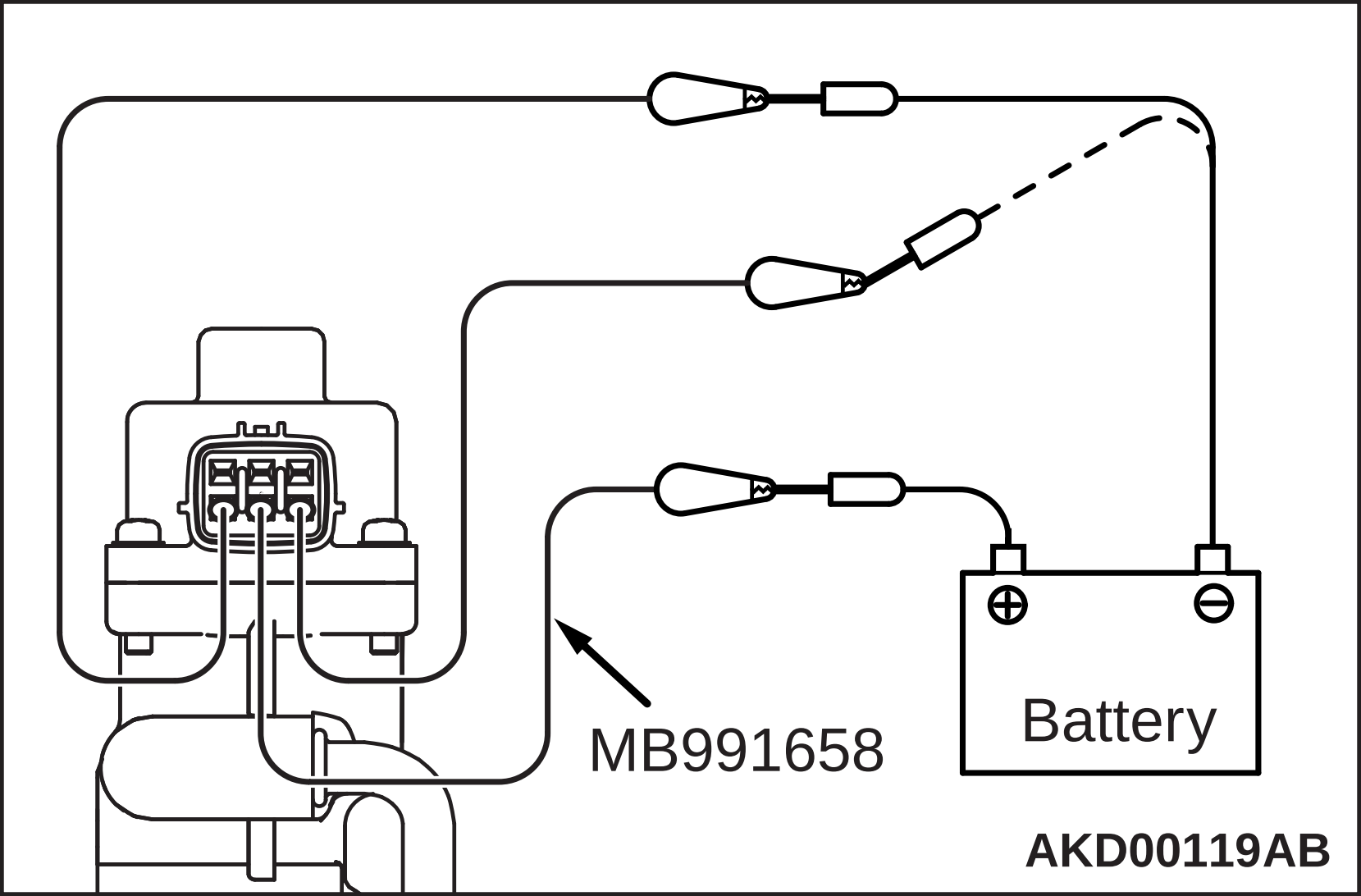
MB991658
Battery
AKD00119AB