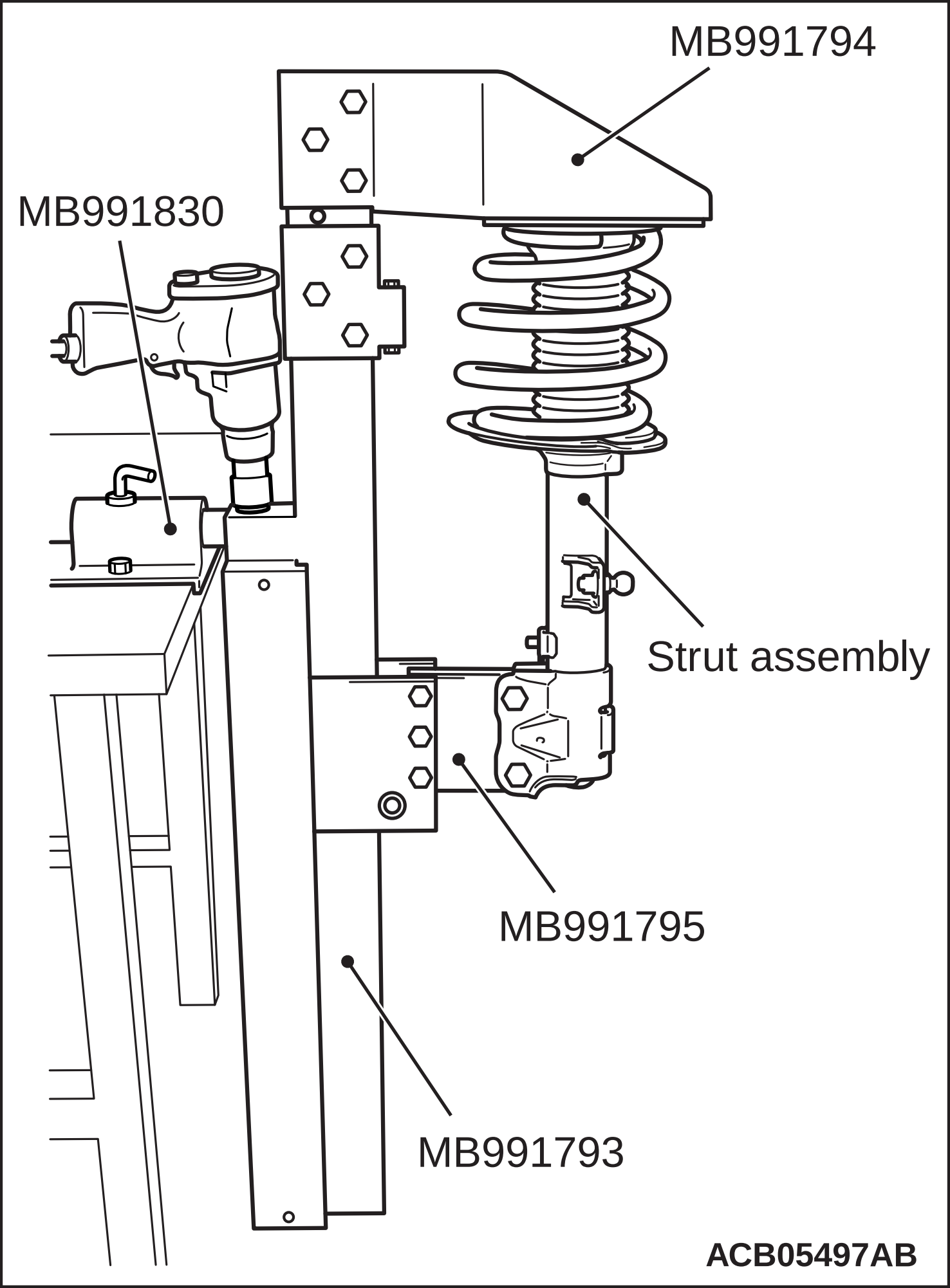
MB991794
MB991830
Strut assembly
MB991795
MB991793
ACB05497AB