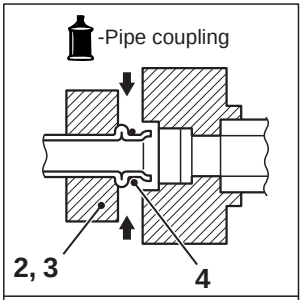
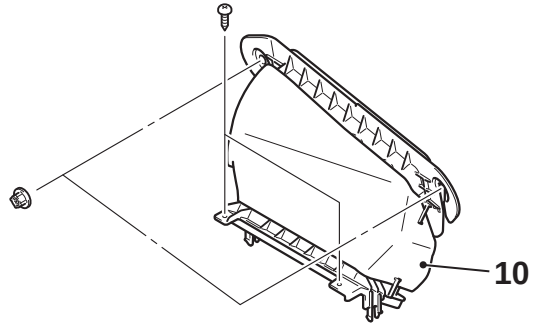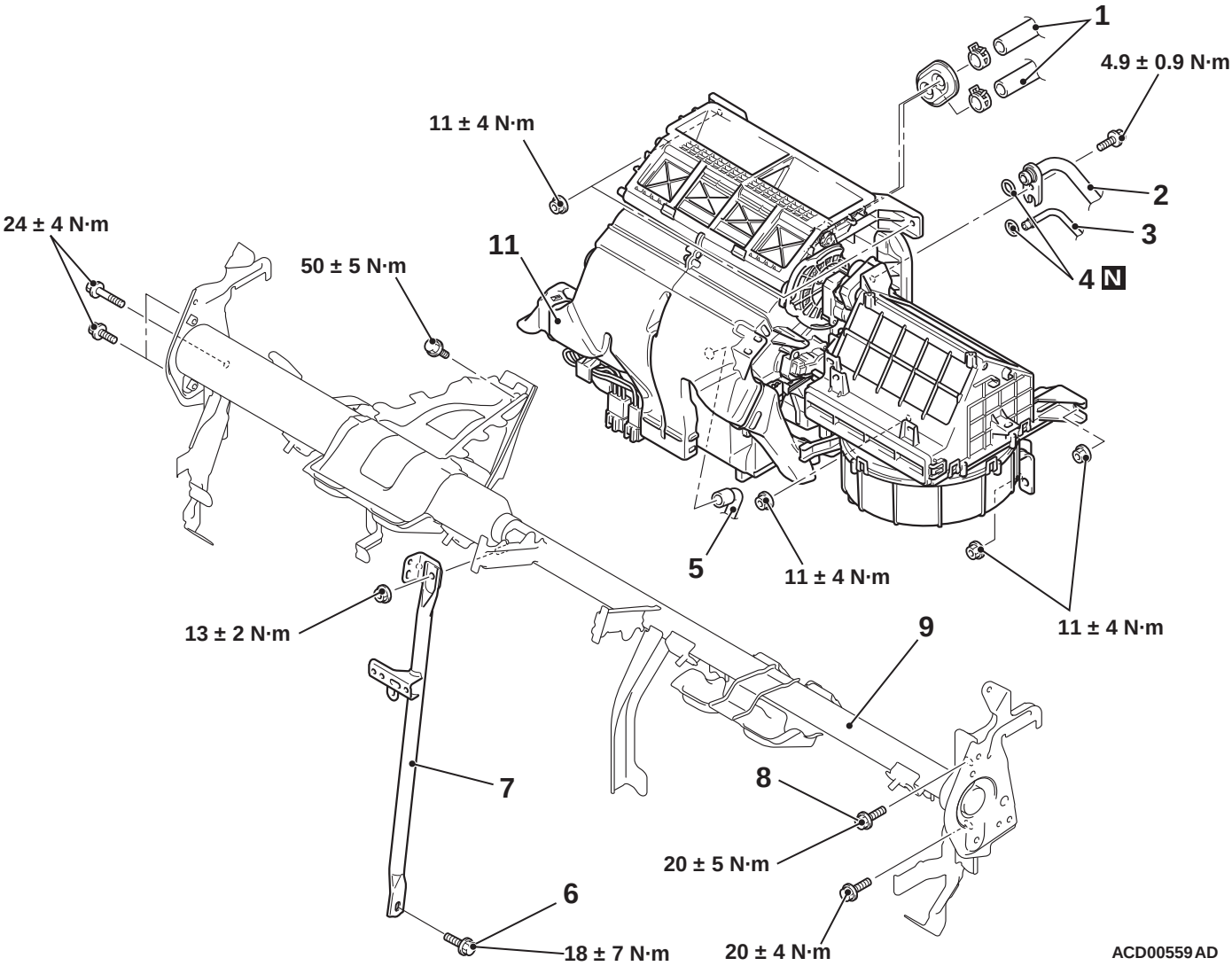
A/C compressor oil:
SUN PAG 56 or S10X