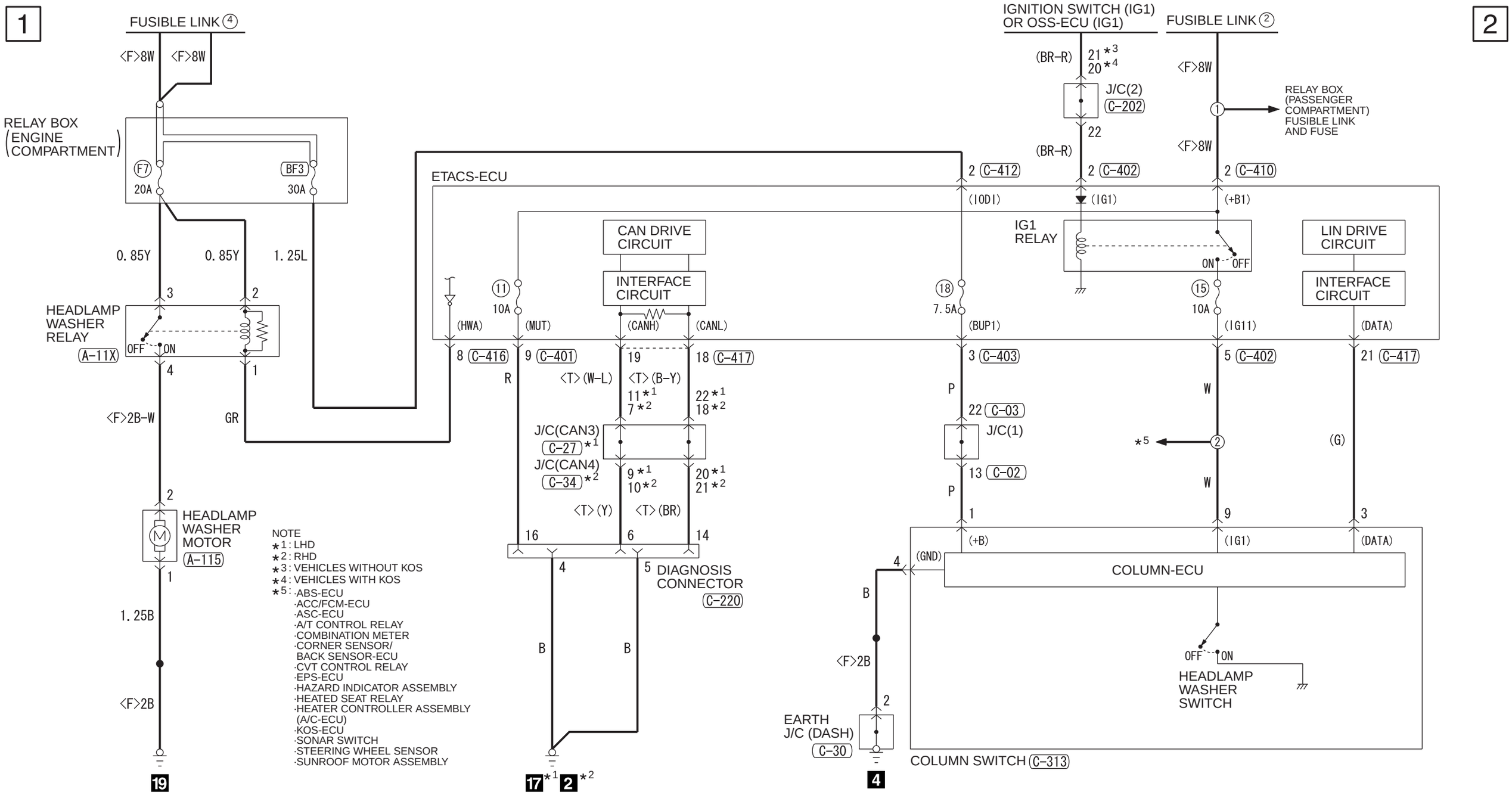
1
2
FUSIBLE LINK ④
<F>8W
<F>8W
RELAY BOX (ENGINE COMPARTMENT)
F7
20A
BF3
30A
0.85Y
0.85Y
1.25L
HEADLAMP WASHER RELAY
A-11X
OFF
ON
3
2
4
1
<F>2B-W
GR
2
HEADLAMP WASHER MOTOR
A-115
1
1.25B
<F>2B
19
ETACS-ECU
(HWA)
11
10A
(MUT)
CAN DRIVE CIRCUIT
INTERFACE CIRCUIT
(CANH)
(CANL)
8 C-416
9 C-401
19
18 C-417
R
<T>(W-L)
<T>(B-Y)
11*1
7*2
22*1
18*2
J/C(CAN3)
C-27 *1
J/C(CAN4)
C-34 *2
9*1
10*2
20*1
21*2
<T>(Y)
<T>(BR)
16
6
14
4
5
DIAGNOSIS CONNECTOR
C-220
B
B
17*1
2*2
IGNITION SWITCH (IG1) OR OSS-ECU (IG1)
(BR-R)
21*3
20*4
J/C(2)
C-202
22
(BR-R)
2 C-412
2 C-402
(IODI)
(IG1)
18
7.5A
(BUP1)
3 C-403
P
22 C-03
J/C(1)
13 C-02
P
1
(+B)
4
(GND)
B
<F>2B
2
EARTH J/C (DASH)
C-30
4
FUSIBLE LINK ②
<F>8W
1
RELAY BOX (PASSENGER COMPARTMENT) FUSIBLE LINK AND FUSE
<F>8W
2 C-410
(+B1)
IG1 RELAY
ON
OFF
15
10A
(IG11)
5 C-402
W
*5
2
W
9
(IG1)
LIN DRIVE CIRCUIT
INTERFACE CIRCUIT
(DATA)
21 C-417
(G)
3
(DATA)
COLUMN-ECU
OFF
ON
HEADLAMP WASHER SWITCH
COLUMN SWITCH C-313
NOTE
*1: LHD
*2: RHD
*3: VEHICLES WITHOUT KOS
*4: VEHICLES WITH KOS
*5: ·ABS-ECU
·ACC/FCM-ECU
·ASC-ECU
·A/T CONTROL RELAY
·COMBINATION METER
·CORNER SENSOR/ BACK SENSOR-ECU
·CVT CONTROL RELAY
·EPS-ECU
·HAZARD INDICATOR ASSEMBLY
·HEATED SEAT RELAY
·HEATER CONTROLLER ASSEMBLY (A/C-ECU)
·KOS-ECU
·SONAR SWITCH
·STEERING WHEEL SENSOR
·SUNROOF MOTOR ASSEMBLY
A-11X
A-115
(MU802210)
C-02
MU801515
C-03
MU801515
C-27
MU801515
C-30
MU801847
C-34
MU801515
C-202
MU801515
C-220
MU803797
FRONT SIDE
C-313
(MU801514)
C-401
MU801841
C-402
MU801839
C-403
(MU801845)
C-410
C-412
MU801325
C-416
C-417
Wire colour code
B : Black LG : Light green G : Green L : Blue W : White Y : Yellow SB : Sky blue
BR : Brown O : Orange GR : Grey R : Red P : Pink V : Violet PU : Purple SI : Silver
HFU13X03AC