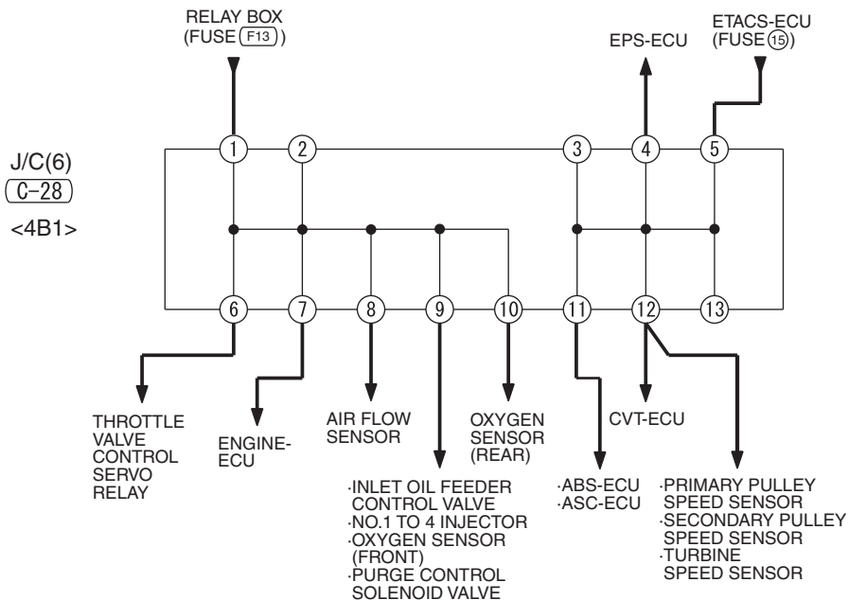
RELAY BOX
(FUSE F13)
EPS-ECU
ETACS-ECU
(FUSE 15)
J/C(6)
C-28
<4B1>
1
2
3
4
5
6
7
8
9
10
11
12
13
THROTTLE
VALVE
CONTROL
SERVO
RELAY
ENGINE-
ECU
AIR FLOW
SENSOR
OXYGEN
SENSOR
(REAR)
CVT-ECU
·INLET OIL FEEDER
CONTROL VALVE
·NO.1 TO 4 INJECTOR
·OXYGEN SENSOR
(FRONT)
·PURGE CONTROL
SOLENOID VALVE
·ABS-ECU
·ASC-ECU
·PRIMARY PULLEY
SPEED SENSOR
·SECONDARY PULLEY
SPEED SENSOR
·TURBINE
SPEED SENSOR

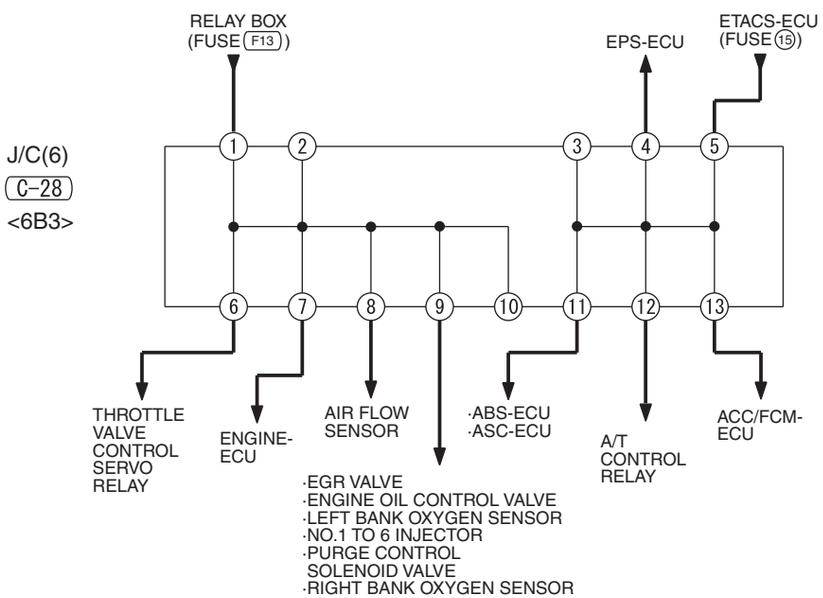
RELAY BOX
(FUSE F13)
EPS-ECU
ETACS-ECU
(FUSE 15)
J/C(6)
C-28
<6B3>
1
2
3
4
5
6
7
8
9
10
11
12
13
THROTTLE
VALVE
CONTROL
SERVO
RELAY
ENGINE-
ECU
AIR FLOW
SENSOR
·ABS-ECU
·ASC-ECU
A/T
CONTROL
RELAY
ACC/FCM-
ECU
·EGR VALVE
·ENGINE OIL CONTROL VALVE
·LEFT BANK OXYGEN SENSOR
·NO.1 TO 6 INJECTOR
·PURGE CONTROL
SOLENOID VALVE
·RIGHT BANK OXYGEN SENSOR

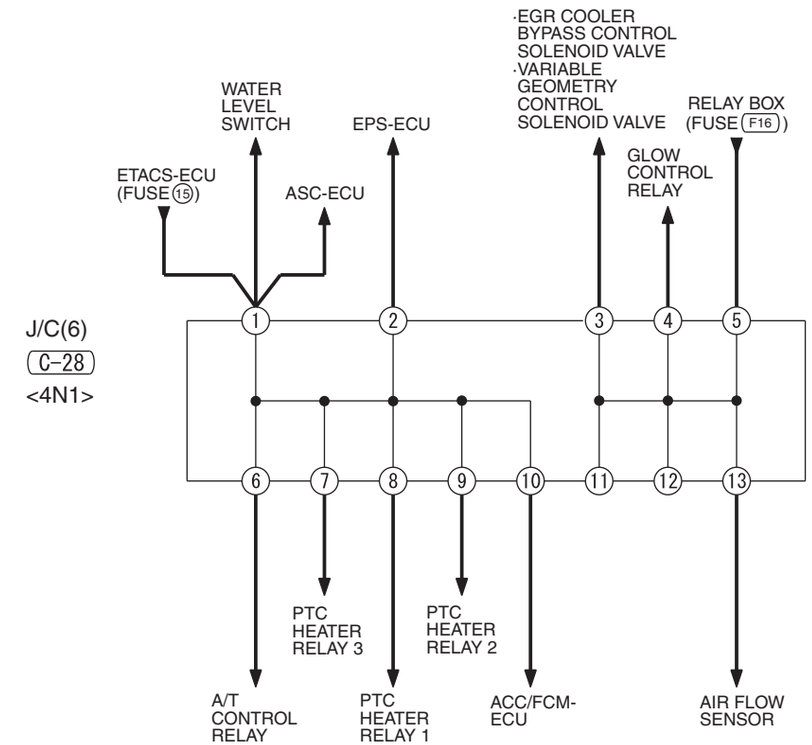
·EGR COOLER
BYPASS CONTROL
SOLENOID VALVE
·VARIABLE
GEOMETRY
CONTROL
SOLENOID VALVE
WATER
LEVEL
SWITCH
EPS-ECU
RELAY BOX
(FUSE F16)
GLOW
CONTROL
RELAY
ETACS-ECU
(FUSE 15)
ASC-ECU
J/C(6)
C-28
<4N1>
1
2
3
4
5
6
7
8
9
10
11
12
13
PTC
HEATER
RELAY 3
PTC
HEATER
RELAY 2
A/T
CONTROL
RELAY
PTC
HEATER
RELAY 1
ACC/FCM-
ECU
AIR FLOW
SENSOR

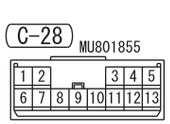
C-28
MU801855
1 2 3 4 5
6 7 8 9 10 11 12 13

HHU00X01EC