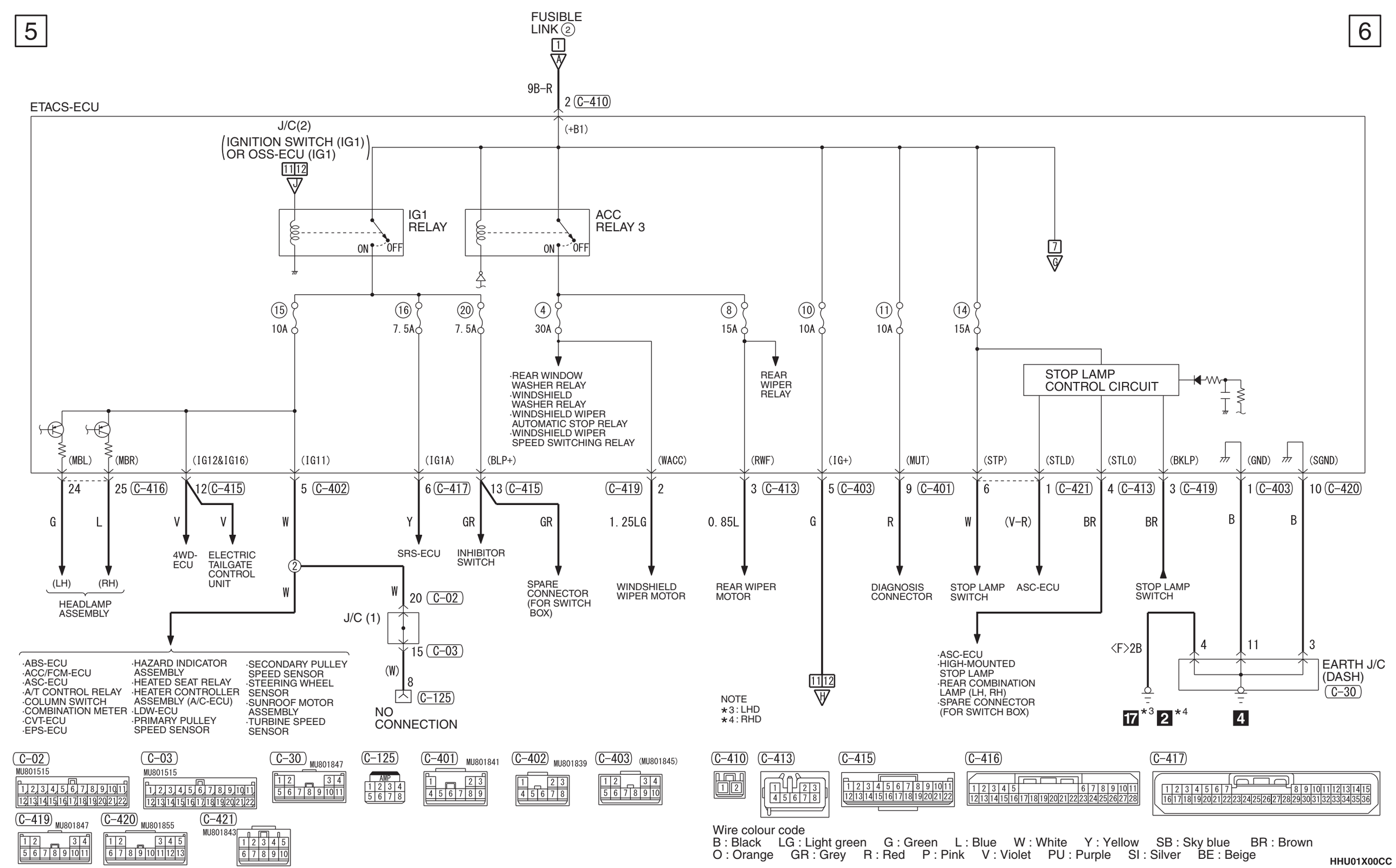
5
6
FUSIBLE LINK ②
1
A
9B-R
2 C-410
(+B1)
ETACS-ECU
J/C(2)
IGNITION SWITCH (IG1) OR OSS-ECU (IG1)
11 12
J
IG1 RELAY
ON
OFF
ACC RELAY 3
ON
OFF
7
G
15 10A
16 7.5A
20 7.5A
4 30A
8 15A
10 10A
11 10A
14 15A
·REAR WINDOW WASHER RELAY
·WINDSHIELD WASHER RELAY
·WINDSHIELD WIPER AUTOMATIC STOP RELAY
·WINDSHIELD WIPER SPEED SWITCHING RELAY
REAR WIPER RELAY
STOP LAMP CONTROL CIRCUIT
(MBL)
(MBR)
(IG12&IG16)
(IG11)
(IG1A)
(BLP+)
(WACC)
(RWF)
(IG+)
(MUT)
(STP)
(STLD)
(STLO)
(BKLP)
(GND)
(SGND)
24
25 C-416
12 C-415
5 C-402
6 C-417
13 C-415
C-419 2
3 C-413
5 C-403
9 C-401
6
1 C-421
4 C-413
3 C-419
1 C-403
10 C-420
G
L
V
V
W
Y
GR
GR
1.25LG
0.85L
G
R
W
(V-R)
BR
BR
B
B
(LH)
(RH)
HEADLAMP ASSEMBLY
4WD-ECU
ELECTRIC TAILGATE CONTROL UNIT
SRS-ECU
INHIBITOR SWITCH
SPARE CONNECTOR (FOR SWITCH BOX)
WINDSHIELD WIPER MOTOR
REAR WIPER MOTOR
DIAGNOSIS CONNECTOR
STOP LAMP SWITCH
ASC-ECU
STOP LAMP SWITCH
2
W
W
20 C-02
J/C (1)
15 C-03
(W)
8
C-125
NO CONNECTION
·ABS-ECU
·ACC/FCM-ECU
·ASC-ECU
·A/T CONTROL RELAY
·COLUMN SWITCH
·COMBINATION METER
·CVT-ECU
·EPS-ECU
·HAZARD INDICATOR ASSEMBLY
·HEATED SEAT RELAY
·HEATER CONTROLLER ASSEMBLY (A/C-ECU)
·LDW-ECU
·PRIMARY PULLEY SPEED SENSOR
·SECONDARY PULLEY SPEED SENSOR
·STEERING WHEEL SENSOR
·SUNROOF MOTOR ASSEMBLY
·TURBINE SPEED SENSOR
NOTE
*3: LHD
*4: RHD
11 12
H
·ASC-ECU
·HIGH-MOUNTED STOP LAMP
·REAR COMBINATION LAMP (LH, RH)
·SPARE CONNECTOR (FOR SWITCH BOX)
<F>2B
4
11
3
EARTH J/C (DASH)
C-30
17 *3
2 *4
4
C-02 MU801515
C-03 MU801515
C-30 MU801847
C-125 AMP
C-401 MU801841
C-402 MU801839
C-403 (MU801845)
C-410
C-413
C-415
C-416
C-417
C-419 MU801847
C-420 MU801855
C-421 MU801843
Wire colour code
B : Black LG : Light green G : Green L : Blue W : White Y : Yellow SB : Sky blue BR : Brown
O : Orange GR : Grey R : Red P : Pink V : Violet PU : Purple SI : Silver BE : Beige
HHU01X00CC