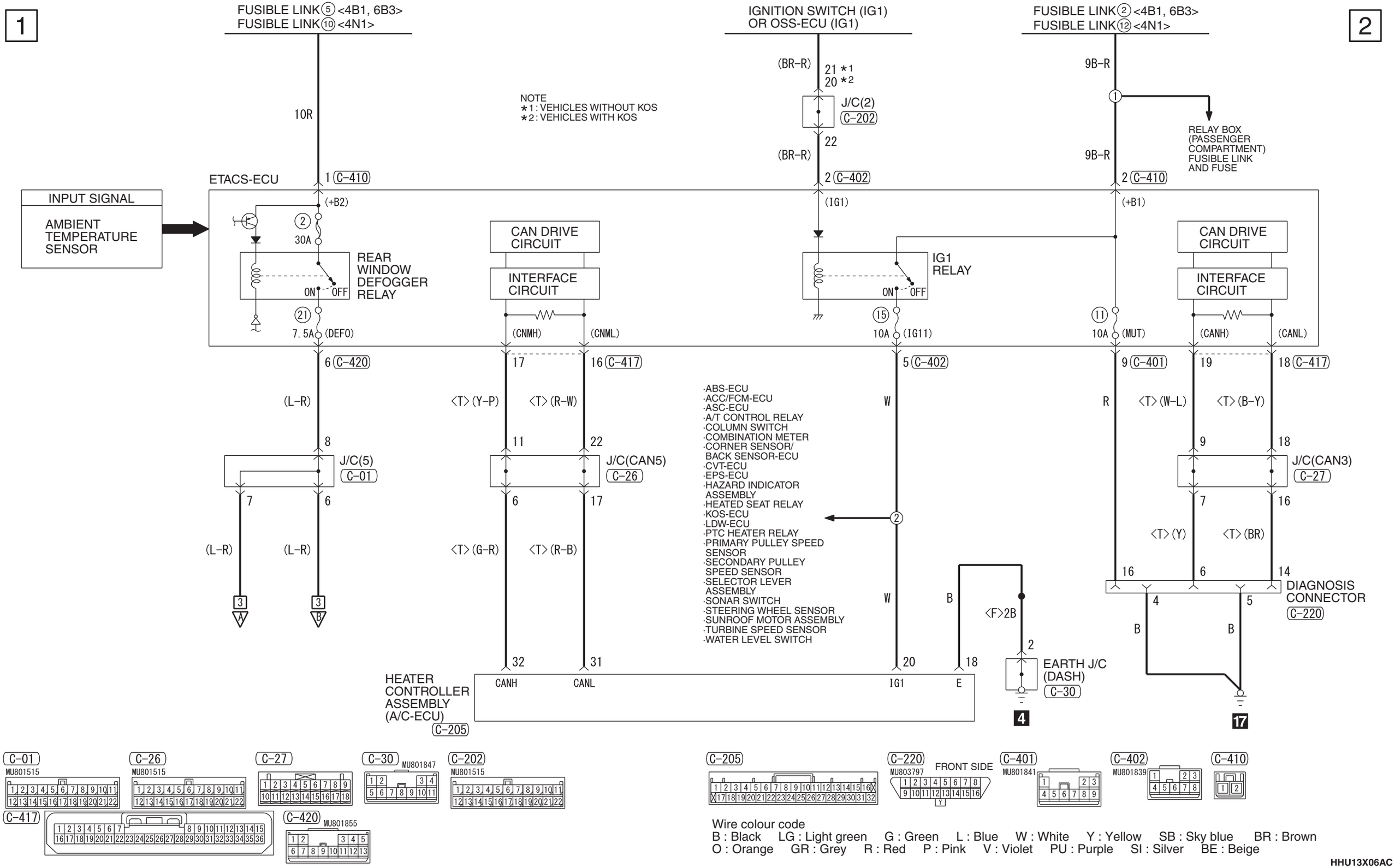
1
2
FUSIBLE LINK ⑤ <4B1, 6B3>
FUSIBLE LINK ⑩ <4N1>
IGNITION SWITCH (IG1)
OR OSS-ECU (IG1)
FUSIBLE LINK ② <4B1, 6B3>
FUSIBLE LINK ⑫ <4N1>
NOTE
*1: VEHICLES WITHOUT KOS
*2: VEHICLES WITH KOS
10R
(BR-R)
21 *1
20 *2
J/C(2)
C-202
22
(BR-R)
9B-R
9B-R
RELAY BOX (PASSENGER COMPARTMENT) FUSIBLE LINK AND FUSE
ETACS-ECU
1 C-410
2 C-402
2 C-410
INPUT SIGNAL
AMBIENT TEMPERATURE SENSOR
(+B2)
(IG1)
(+B1)
30A
REAR WINDOW DEFOGGER RELAY
ON
OFF
CAN DRIVE CIRCUIT
INTERFACE CIRCUIT
IG1 RELAY
7.5A (DEFO)
(CNMH)
(CNML)
10A (IG11)
10A (MUT)
(CANH)
(CANL)
6 C-420
17
16 C-417
5 C-402
9 C-401
19
18 C-417
(L-R)
<T> (Y-P)
<T> (R-W)
W
R
<T> (W-L)
<T> (B-Y)
8
11
22
9
18
J/C(5)
C-01
J/C(CAN5)
C-26
J/C(CAN3)
C-27
7
6
6
17
7
16
(L-R)
(L-R)
<T> (G-R)
<T> (R-B)
<T> (Y)
<T> (BR)
·ABS-ECU
·ACC/FCM-ECU
·ASC-ECU
·A/T CONTROL RELAY
·COLUMN SWITCH
·COMBINATION METER
·CORNER SENSOR/ BACK SENSOR-ECU
·CVT-ECU
·EPS-ECU
·HAZARD INDICATOR ASSEMBLY
·HEATED SEAT RELAY
·KOS-ECU
·LDW-ECU
·PTC HEATER RELAY
·PRIMARY PULLEY SPEED SENSOR
·SECONDARY PULLEY SPEED SENSOR
·SELECTOR LEVER ASSEMBLY
·SONAR SWITCH
·STEERING WHEEL SENSOR
·SUNROOF MOTOR ASSEMBLY
·TURBINE SPEED SENSOR
·WATER LEVEL SWITCH
W
B
<F>2B
16
6
14
DIAGNOSIS CONNECTOR
C-220
4
5
B
B
3
A
3
B
32
31
20
18
2
EARTH J/C (DASH)
C-30
HEATER CONTROLLER ASSEMBLY (A/C-ECU)
C-205
CANH
CANL
IG1
E
4
17
C-01
MU801515
C-26
MU801515
C-27
C-30
MU801847
C-202
MU801515
C-417
C-420
MU801855
C-205
C-220
MU803797
FRONT SIDE
C-401
MU801841
C-402
MU801839
C-410
Wire colour code
B : Black LG : Light green G : Green L : Blue W : White Y : Yellow SB : Sky blue BR : Brown
O : Orange GR : Grey R : Red P : Pink V : Violet PU : Purple SI : Silver BE : Beige
HHU13X06AC