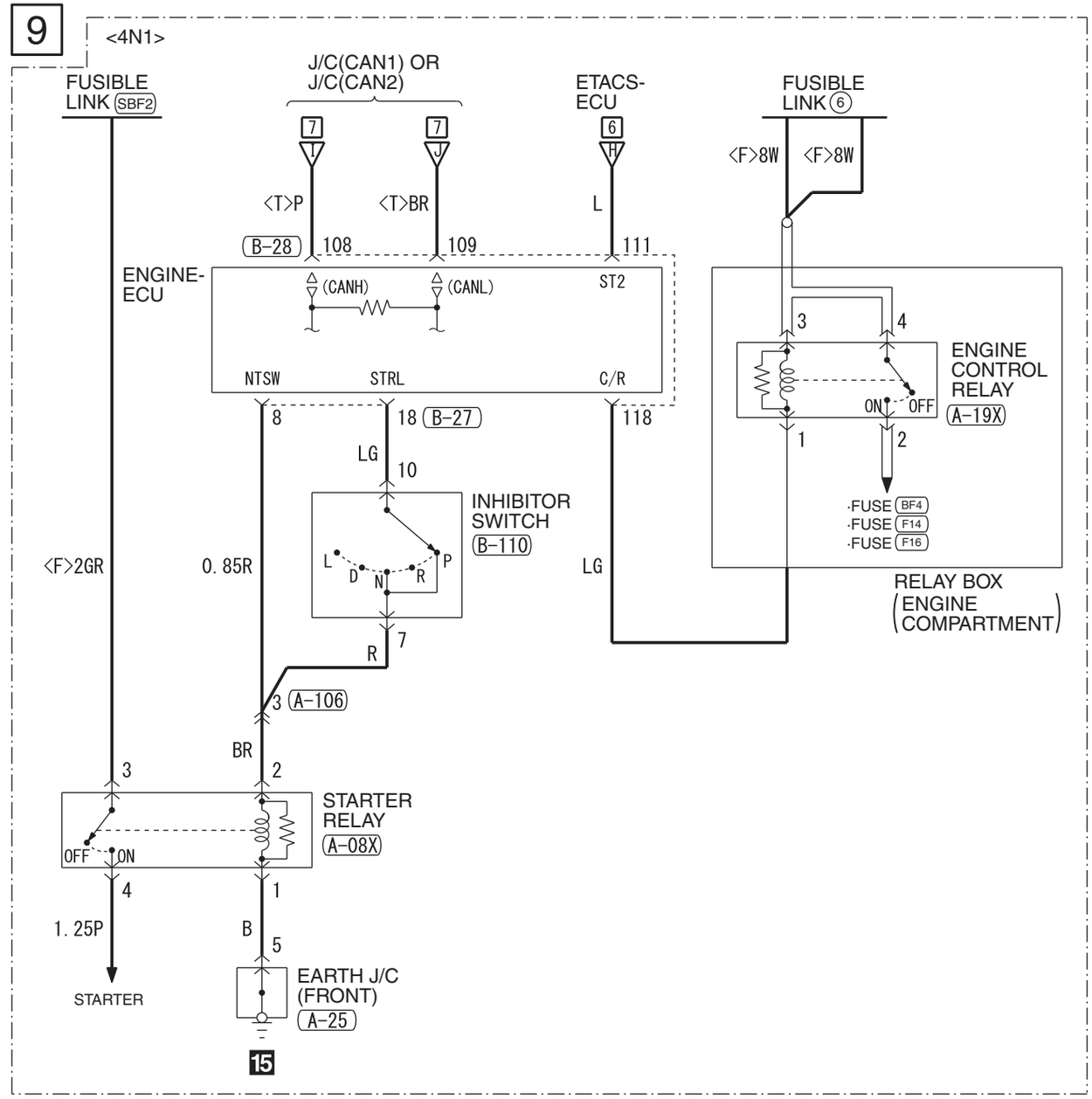
9
<4N1>
FUSIBLE LINK SBF2
J/C(CAN1) OR J/C(CAN2)
ETACS-ECU
FUSIBLE LINK 6
<F>8W
<F>8W
<T>P
<T>BR
L
B-28
108
109
111
ENGINE-ECU
(CANH)
(CANL)
ST2
NTSW
STRL
C/R
8
18 B-27
118
LG
10
INHIBITOR SWITCH B-110
L
D
N
R
P
<F>2GR
0. 85R
LG
R
7
3 A-106
BR
3
2
STARTER RELAY A-08X
OFF
ON
4
1
1. 25P
B
5
STARTER
EARTH J/C (FRONT) A-25
15
3
4
ENGINE CONTROL RELAY A-19X
ON
OFF
1
2
·FUSE BF4
·FUSE F14
·FUSE F16
RELAY BOX (ENGINE COMPARTMENT)

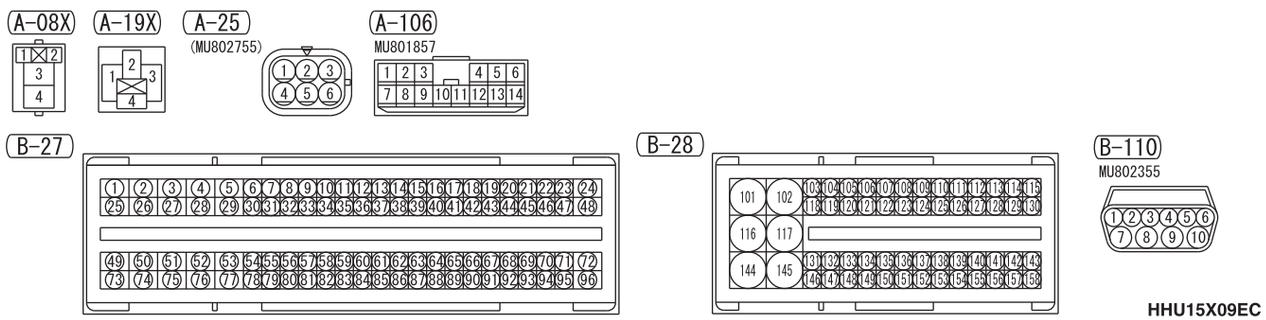
A-08X
A-19X
A-25
(MU802755)
A-106
MU801857
B-27
B-28
B-110
MU802355

HHU15X09EC