Rear Wiper Drive Circuit

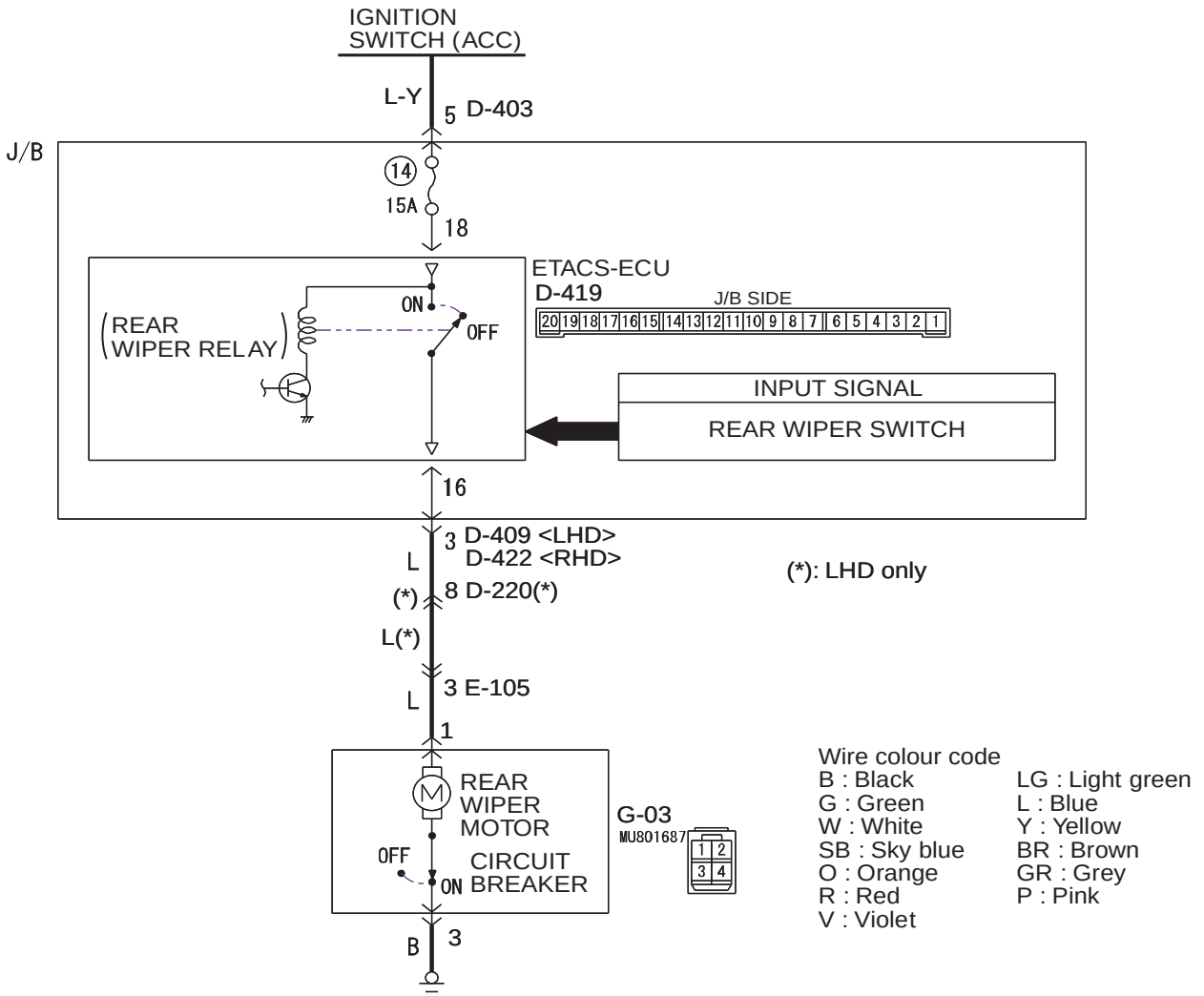

AC608353AC