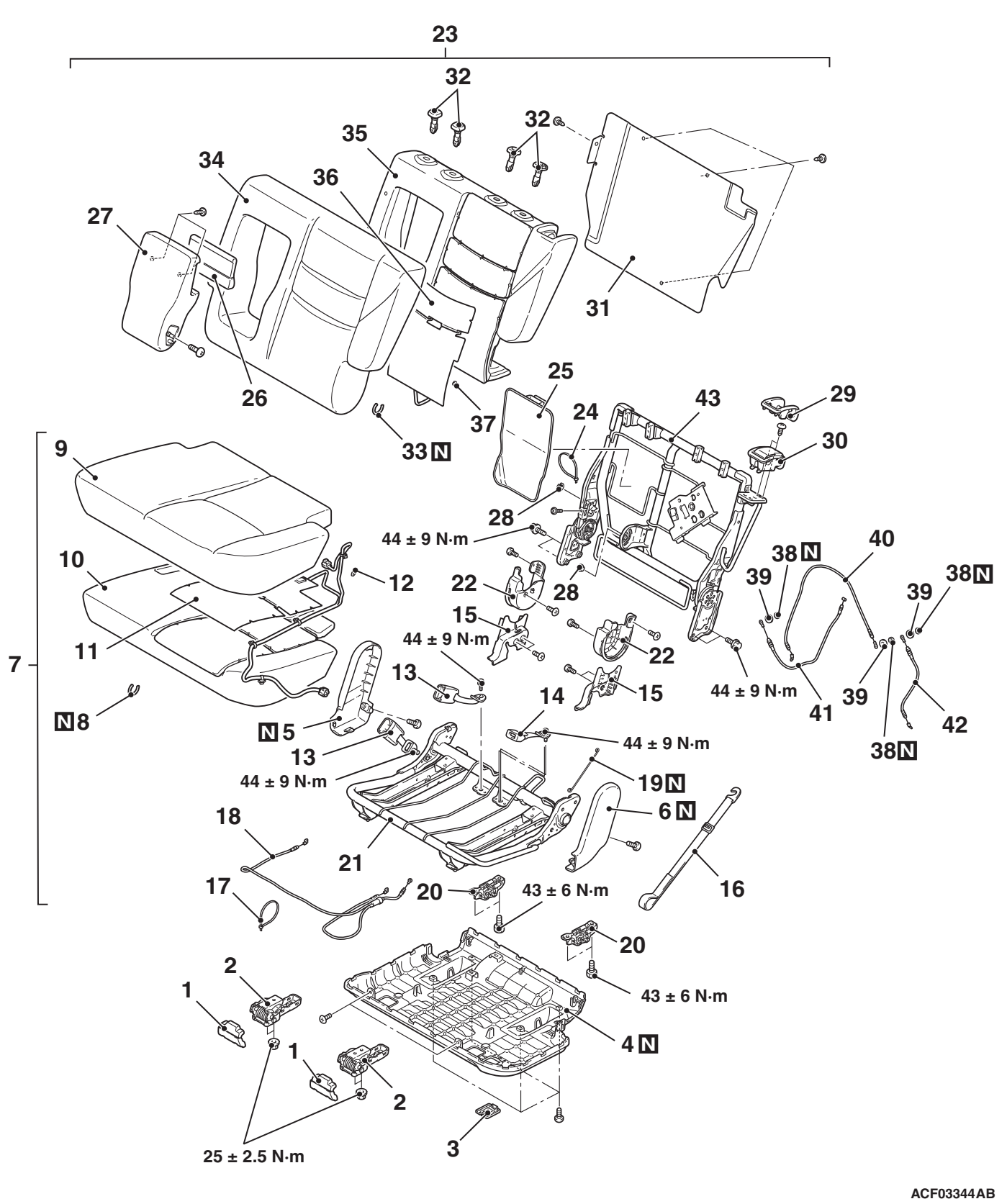
23
32
32
35
34
36
27
31
26
25
37
33 N
24
43
29
30
9
28
44 ± 9 N·m
10
12
22
28
38 N
40
39
38 N
39
15
44 ± 9 N·m
22
11
7
13
15
44 ± 9 N·m
41
39
42
N 8
N 5
14
44 ± 9 N·m
38 N
13
44 ± 9 N·m
19 N
6 N
18
21
16
17
20
43 ± 6 N·m
20
2
43 ± 6 N·m
1
4 N
1
2
3
25 ± 2.5 N·m

ACF03344AB