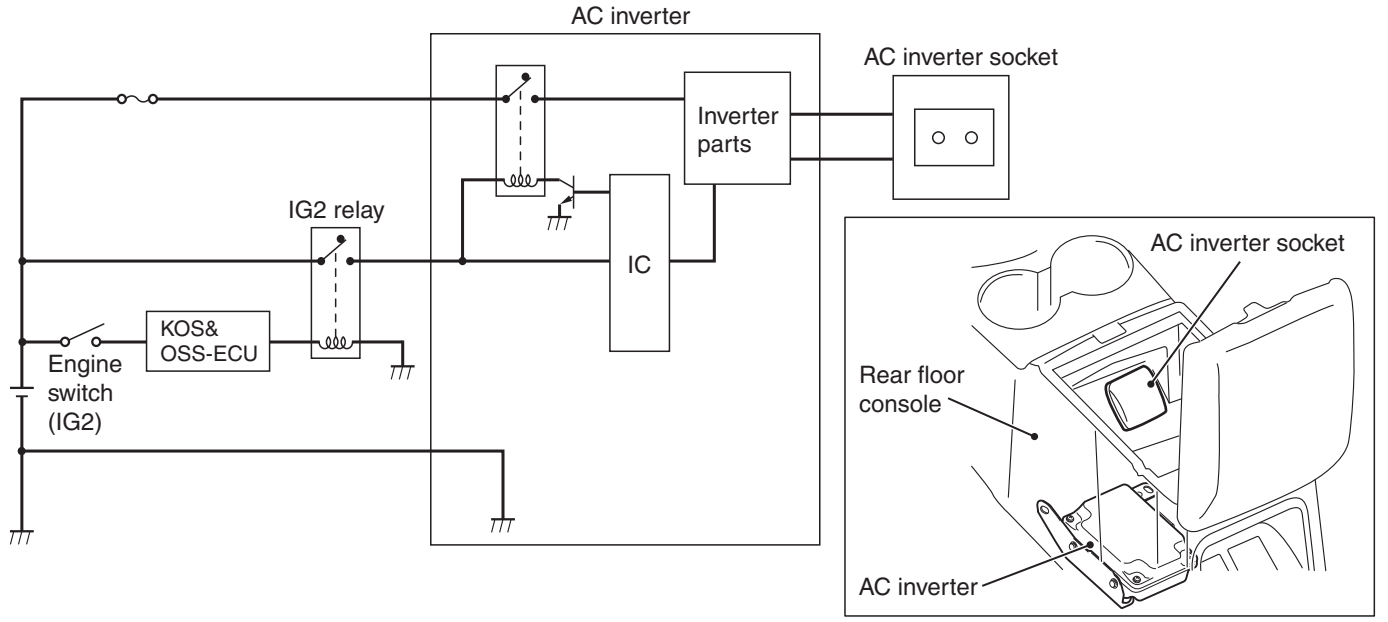
AC inverter
AC inverter socket
Inverter parts
IG2 relay
IC
KOS& OSS-ECU
Engine switch (IG2)
AC inverter socket
Rear floor console
AC inverter

ACH04601AB