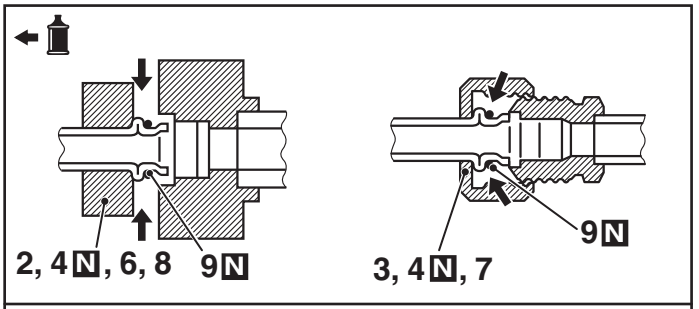

A/C compressor oil: ND-OIL 8

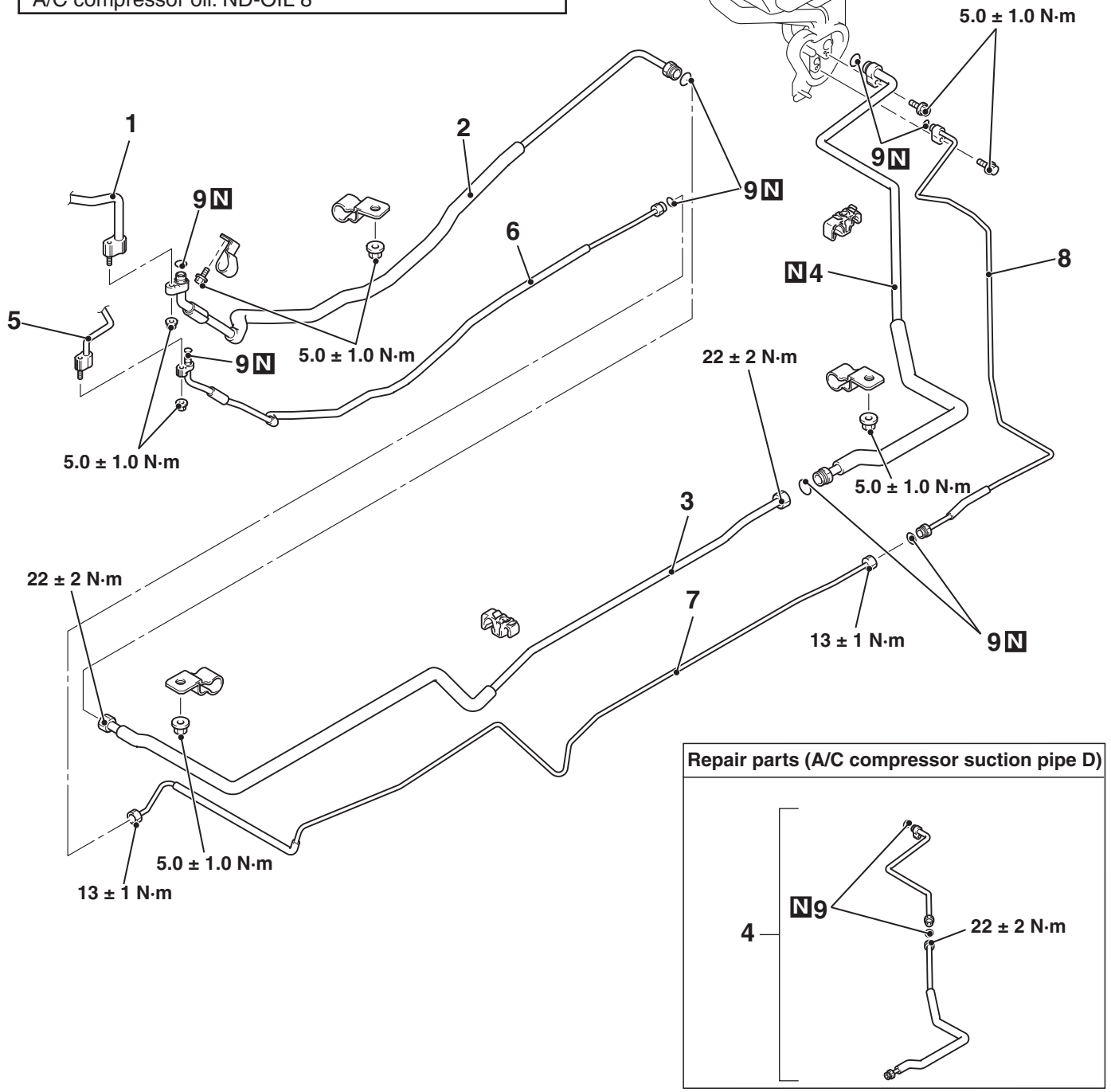

ACF02627AB