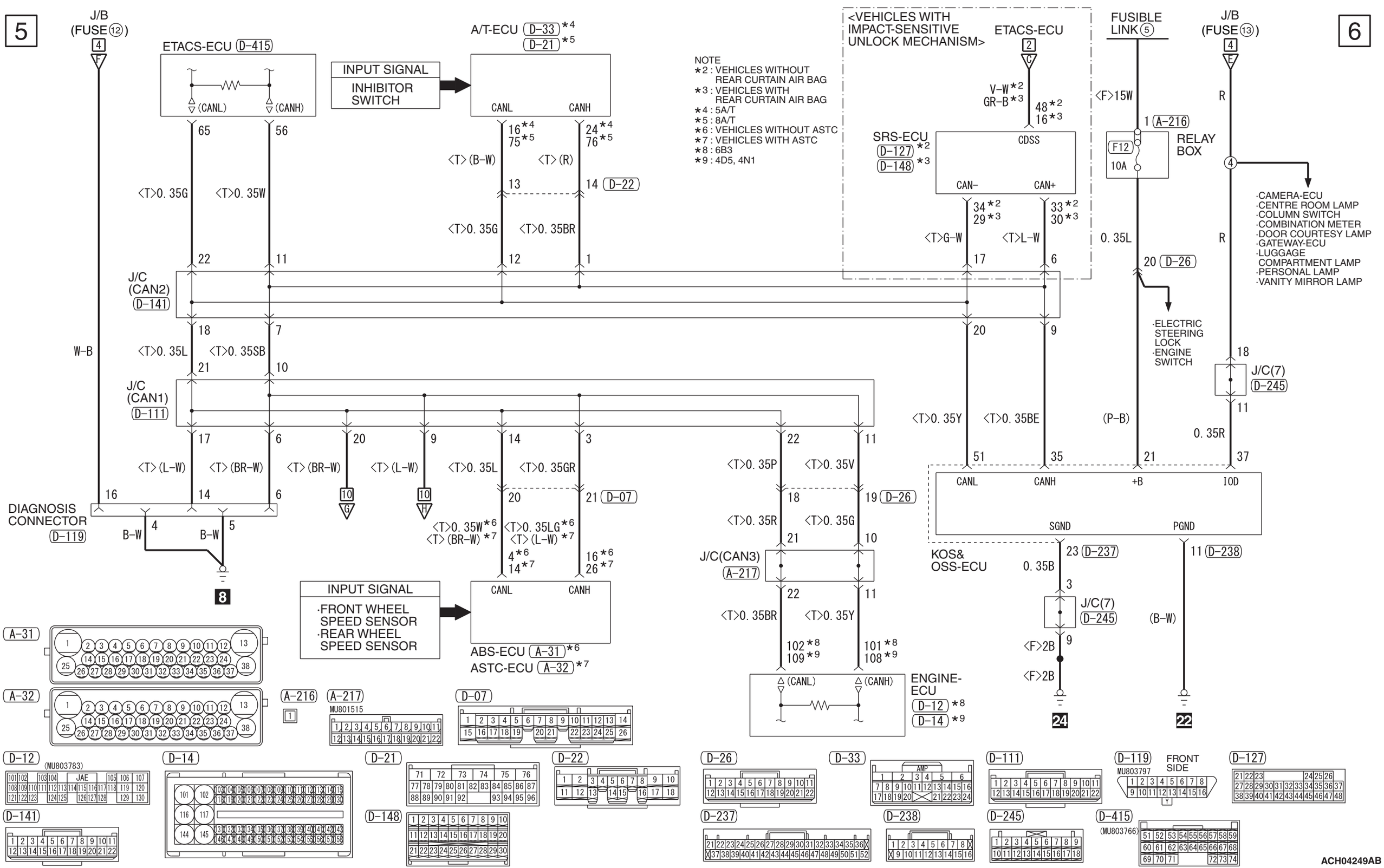
5
6
J/B (FUSE ⑫)
ETACS-ECU D-415
(CANL)
(CANH)
INPUT SIGNAL
INHIBITOR SWITCH
A/T-ECU D-33 *4
D-21 *5
CANL
CANH
NOTE
*2 : VEHICLES WITHOUT REAR CURTAIN AIR BAG
*3 : VEHICLES WITH REAR CURTAIN AIR BAG
*4 : 5A/T
*5 : 8A/T
*6 : VEHICLES WITHOUT ASTC
*7 : VEHICLES WITH ASTC
*8 : 6B3
*9 : 4D5, 4N1
<VEHICLES WITH IMPACT-SENSITIVE UNLOCK MECHANISM>
ETACS-ECU
V-W*2
GR-B*3
48*2
16*3
SRS-ECU D-127 *2
D-148 *3
CDSS
CAN−
CAN+
FUSIBLE LINK ⑤
<F>15W
F12
10A
RELAY BOX
J/B (FUSE ⑬)
R
·CAMERA-ECU
·CENTRE ROOM LAMP
·COLUMN SWITCH
·COMBINATION METER
·DOOR COURTESY LAMP
·GATEWAY-ECU
·LUGGAGE COMPARTMENT LAMP
·PERSONAL LAMP
·VANITY MIRROR LAMP
<T>0. 35G
<T>0. 35W
<T> (B-W)
<T> (R)
D-22
<T>0. 35BR
<T>G-W
<T>L-W
0. 35L
D-26
·ELECTRIC STEERING LOCK
·ENGINE SWITCH
J/C (CAN2) D-141
W-B
<T>0. 35L
<T>0. 35SB
J/C(7) D-245
J/C (CAN1) D-111
<T>0. 35Y
<T>0. 35BE
(P-B)
0. 35R
<T> (L-W)
<T> (BR-W)
<T>0. 35L
<T>0. 35GR
D-07
<T>0. 35P
<T>0. 35V
<T>0. 35R
<T>0. 35G
DIAGNOSIS CONNECTOR D-119
B-W
<T>0. 35W*6
<T> (BR-W) *7
<T>0. 35LG*6
<T> (L-W) *7
J/C(CAN3) A-217
KOS& OSS-ECU
0. 35B
D-237
D-238
IOD
+B
SGND
PGND
J/C(7) D-245
(B-W)
<F>2B
INPUT SIGNAL
·FRONT WHEEL SPEED SENSOR
·REAR WHEEL SPEED SENSOR
ABS-ECU A-31 *6
ASTC-ECU A-32 *7
ENGINE-ECU
D-12 *8
D-14 *9
A-31
A-32
A-216
A-217
MU801515
D-07
D-12
(MU803783)
JAE
D-14
D-21
D-22
D-26
D-33
AMP
D-111
D-119
MU803797
FRONT SIDE
D-127
D-141
D-148
D-237
D-238
D-245
D-415
(MU803766)
ACH04249AB