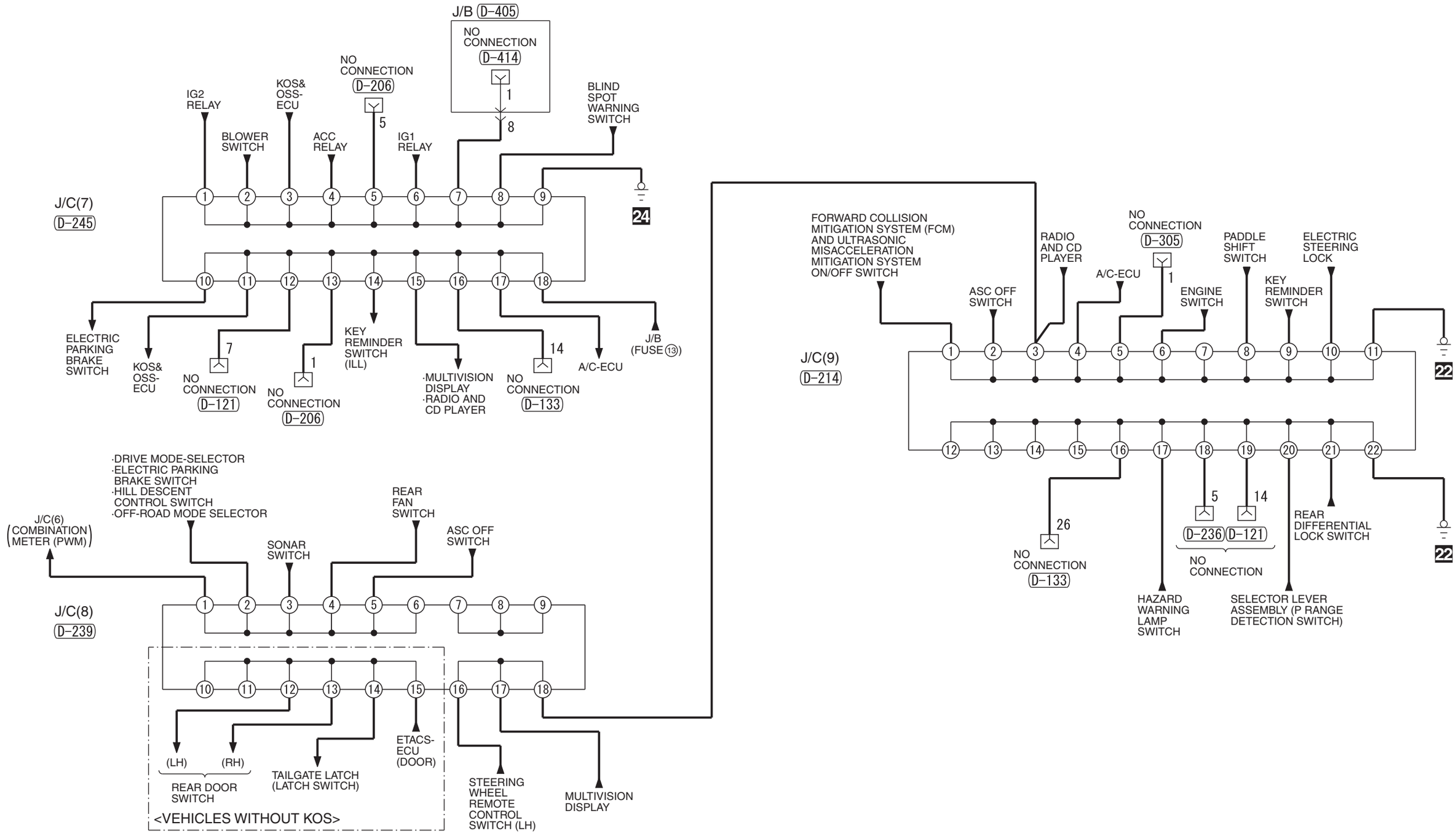
J/B D-405
NO CONNECTION D-414
NO CONNECTION D-206
IG2 RELAY
KOS& OSS-ECU
BLOWER SWITCH
ACC RELAY
IG1 RELAY
BLIND SPOT WARNING SWITCH
J/C(7) D-245
24
ELECTRIC PARKING BRAKE SWITCH
KOS& OSS-ECU
NO CONNECTION D-121
NO CONNECTION D-206
KEY REMINDER SWITCH (ILL)
·MULTIVISION DISPLAY ·RADIO AND CD PLAYER
NO CONNECTION D-133
A/C-ECU
J/B (FUSE 13)
FORWARD COLLISION MITIGATION SYSTEM (FCM) AND ULTRASONIC MISACCELERATION MITIGATION SYSTEM ON/OFF SWITCH
RADIO AND CD PLAYER
NO CONNECTION D-305
PADDLE SHIFT SWITCH
ELECTRIC STEERING LOCK
A/C-ECU
ASC OFF SWITCH
ENGINE SWITCH
KEY REMINDER SWITCH
J/C(9) D-214
22
NO CONNECTION D-133
D-236 D-121
NO CONNECTION
REAR DIFFERENTIAL LOCK SWITCH
HAZARD WARNING LAMP SWITCH
SELECTOR LEVER ASSEMBLY (P RANGE DETECTION SWITCH)
·DRIVE MODE-SELECTOR ·ELECTRIC PARKING BRAKE SWITCH ·HILL DESCENT CONTROL SWITCH ·OFF-ROAD MODE SELECTOR
J/C(6) (COMBINATION METER (PWM))
SONAR SWITCH
REAR FAN SWITCH
ASC OFF SWITCH
J/C(8) D-239
(LH)
(RH)
REAR DOOR SWITCH
TAILGATE LATCH (LATCH SWITCH)
ETACS-ECU (DOOR)
STEERING WHEEL REMOTE CONTROL SWITCH (LH)
MULTIVISION DISPLAY
<VEHICLES WITHOUT KOS>
D-121
MU801587
D-133
AMP
D-206
D-214
D-236
D-239
D-245
D-305
MU801670
D-405
MU801839
D-414

HHM00X01CC