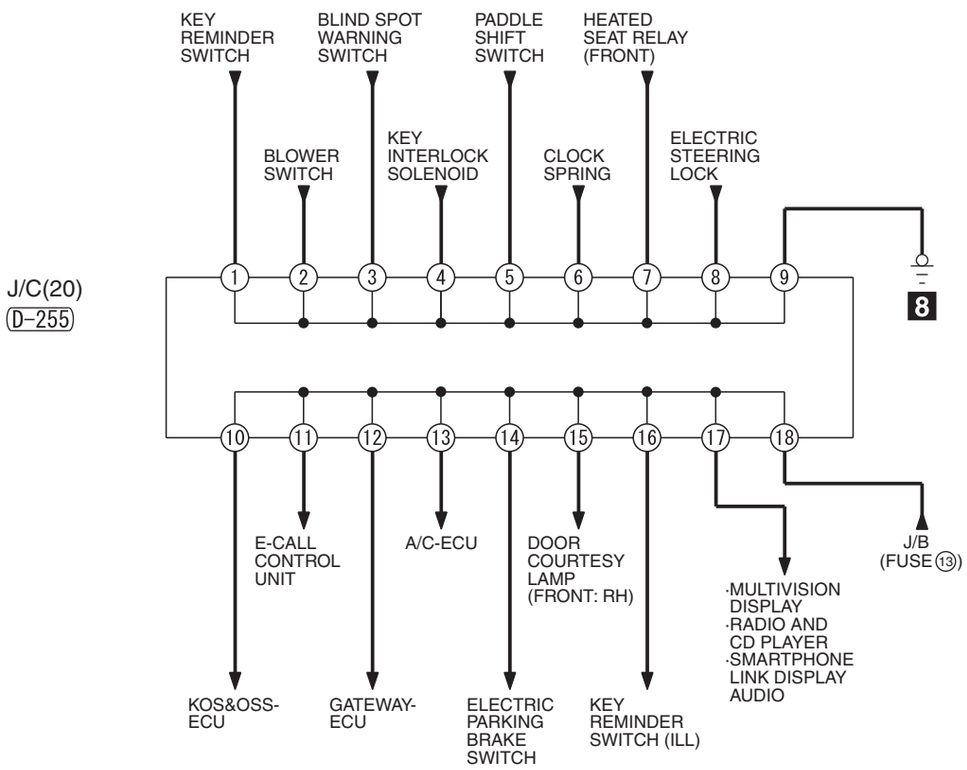
KEY REMINDER SWITCH
BLIND SPOT WARNING SWITCH
PADDLE SHIFT SWITCH
HEATED SEAT RELAY (FRONT)
BLOWER SWITCH
KEY INTERLOCK SOLENOID
CLOCK SPRING
ELECTRIC STEERING LOCK
J/C(20)
D-255
8
E-CALL CONTROL UNIT
A/C-ECU
DOOR COURTESY LAMP (FRONT: RH)
J/B (FUSE 13)
·MULTIVISION DISPLAY ·RADIO AND CD PLAYER ·SMARTPHONE LINK DISPLAY AUDIO
KOS&OSS-ECU
GATEWAY-ECU
ELECTRIC PARKING BRAKE SWITCH
KEY REMINDER SWITCH (ILL)

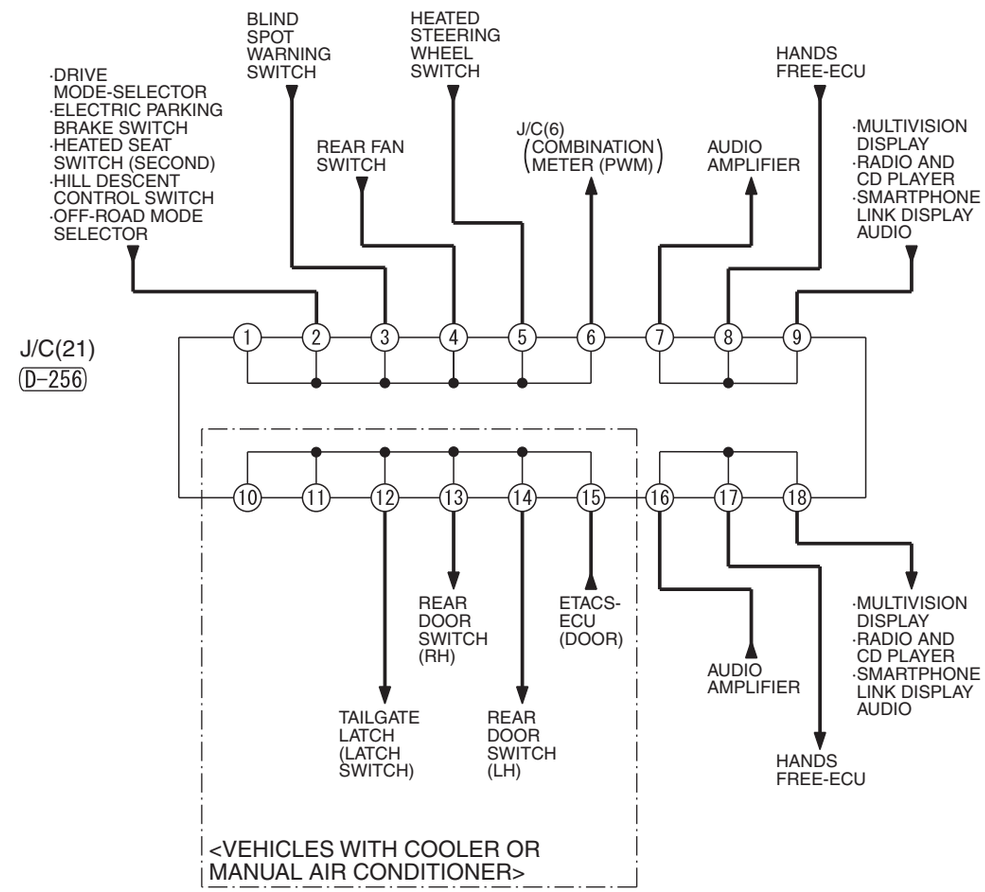
·DRIVE MODE-SELECTOR ·ELECTRIC PARKING BRAKE SWITCH ·HEATED SEAT SWITCH (SECOND) ·HILL DESCENT CONTROL SWITCH ·OFF-ROAD MODE SELECTOR
BLIND SPOT WARNING SWITCH
REAR FAN SWITCH
HEATED STEERING WHEEL SWITCH
J/C(6) (COMBINATION METER (PWM))
AUDIO AMPLIFIER
HANDS FREE-ECU
·MULTIVISION DISPLAY ·RADIO AND CD PLAYER ·SMARTPHONE LINK DISPLAY AUDIO
J/C(21)
D-256
TAILGATE LATCH (LATCH SWITCH)
REAR DOOR SWITCH (LH)
REAR DOOR SWITCH (RH)
ETACS-ECU (DOOR)
AUDIO AMPLIFIER
HANDS FREE-ECU
·MULTIVISION DISPLAY ·RADIO AND CD PLAYER ·SMARTPHONE LINK DISPLAY AUDIO
<VEHICLES WITH COOLER OR MANUAL AIR CONDITIONER>

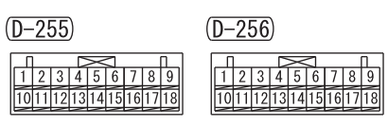
D-255
1 2 3 4 5 6 7 8 9
10 11 12 13 14 15 16 17 18
D-256
1 2 3 4 5 6 7 8 9
10 11 12 13 14 15 16 17 18

HHM00X03EC