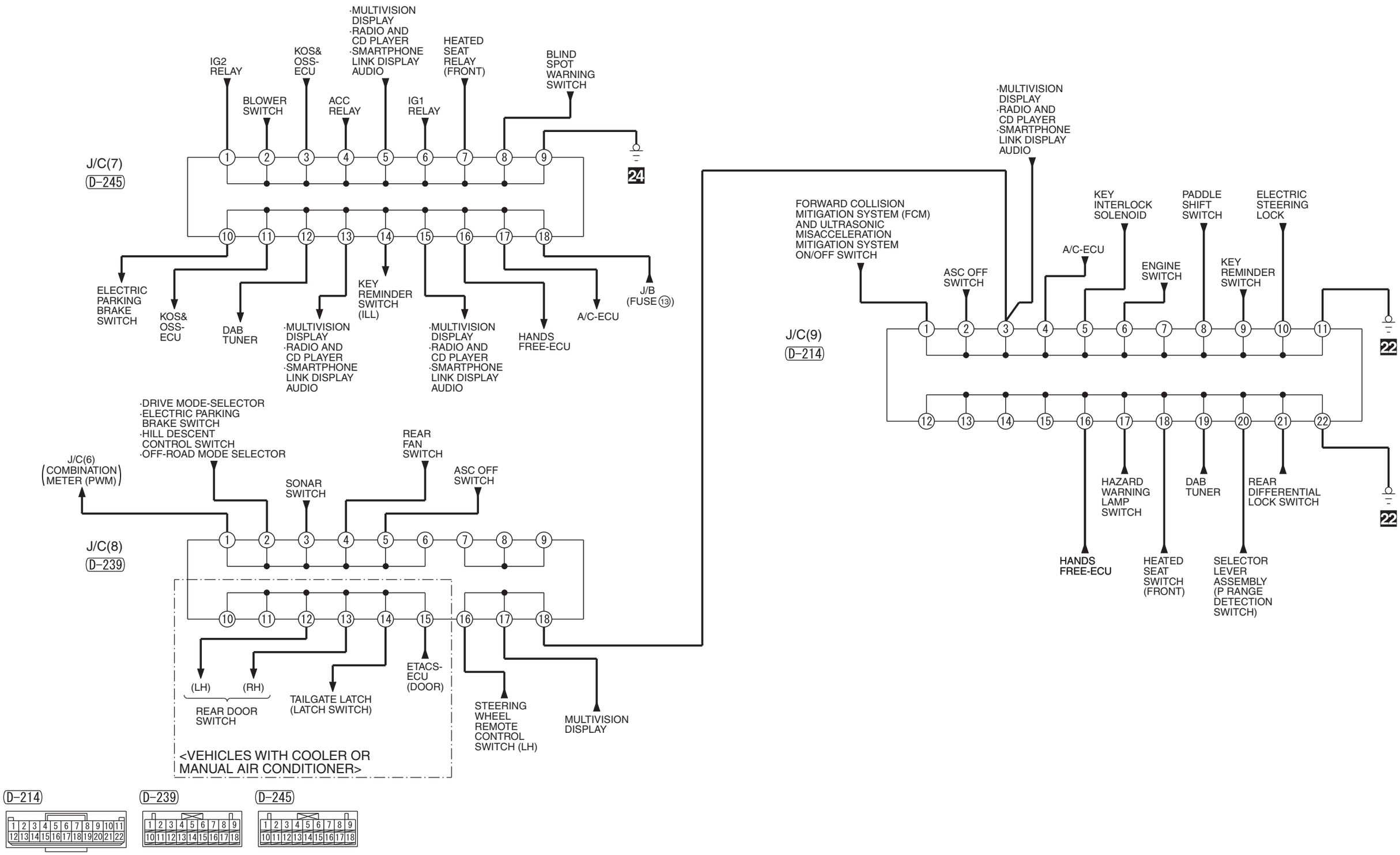
J/C(7)
D-245
IG2 RELAY
BLOWER SWITCH
KOS& OSS-ECU
ACC RELAY
·MULTIVISION DISPLAY ·RADIO AND CD PLAYER ·SMARTPHONE LINK DISPLAY AUDIO
IG1 RELAY
HEATED SEAT RELAY (FRONT)
BLIND SPOT WARNING SWITCH
24
ELECTRIC PARKING BRAKE SWITCH
KOS& OSS-ECU
DAB TUNER
·MULTIVISION DISPLAY ·RADIO AND CD PLAYER ·SMARTPHONE LINK DISPLAY AUDIO
KEY REMINDER SWITCH (ILL)
·MULTIVISION DISPLAY ·RADIO AND CD PLAYER ·SMARTPHONE LINK DISPLAY AUDIO
HANDS FREE-ECU
A/C-ECU
J/B (FUSE 13)
J/C(6) COMBINATION METER (PWM)
·DRIVE MODE-SELECTOR ·ELECTRIC PARKING BRAKE SWITCH ·HILL DESCENT CONTROL SWITCH ·OFF-ROAD MODE SELECTOR
SONAR SWITCH
REAR FAN SWITCH
ASC OFF SWITCH
J/C(8)
D-239
(LH)
(RH)
REAR DOOR SWITCH
TAILGATE LATCH (LATCH SWITCH)
ETACS-ECU (DOOR)
STEERING WHEEL REMOTE CONTROL SWITCH (LH)
MULTIVISION DISPLAY
<VEHICLES WITH COOLER OR MANUAL AIR CONDITIONER>
·MULTIVISION DISPLAY ·RADIO AND CD PLAYER ·SMARTPHONE LINK DISPLAY AUDIO
FORWARD COLLISION MITIGATION SYSTEM (FCM) AND ULTRASONIC MISACCELERATION MITIGATION SYSTEM ON/OFF SWITCH
ASC OFF SWITCH
A/C-ECU
KEY INTERLOCK SOLENOID
ENGINE SWITCH
PADDLE SHIFT SWITCH
KEY REMINDER SWITCH
ELECTRIC STEERING LOCK
J/C(9)
D-214
22
HAZARD WARNING LAMP SWITCH
DAB TUNER
REAR DIFFERENTIAL LOCK SWITCH
22
HANDS FREE-ECU
HEATED SEAT SWITCH (FRONT)
SELECTOR LEVER ASSEMBLY (P RANGE DETECTION SWITCH)
D-214
D-239
D-245

HHM00X04CC