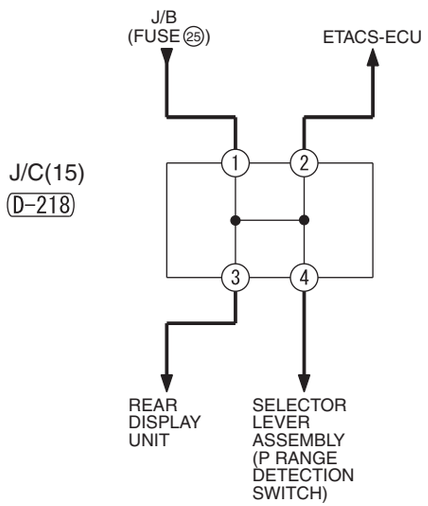
J/B
(FUSE 25)
ETACS-ECU
J/C(15)
D-218
1
2
3
4
REAR
DISPLAY
UNIT
SELECTOR
LEVER
ASSEMBLY
(P RANGE
DETECTION
SWITCH)

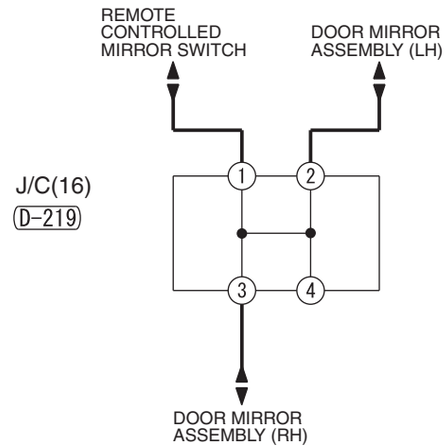
REMOTE
CONTROLLED
MIRROR SWITCH
DOOR MIRROR
ASSEMBLY (LH)
J/C(16)
D-219
1
2
3
4
DOOR MIRROR
ASSEMBLY (RH)

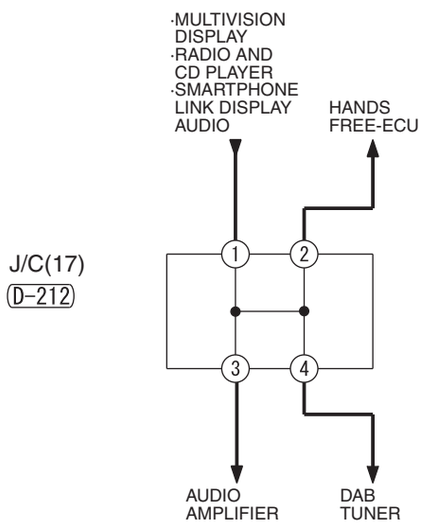
·MULTIVISION
DISPLAY
·RADIO AND
CD PLAYER
·SMARTPHONE
LINK DISPLAY
AUDIO
HANDS
FREE-ECU
J/C(17)
D-212
1
2
3
4
AUDIO
AMPLIFIER
DAB
TUNER

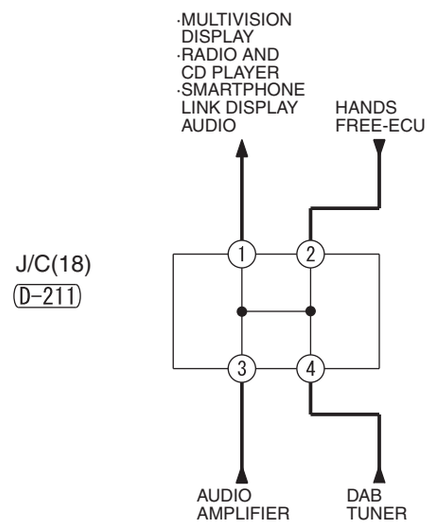
·MULTIVISION
DISPLAY
·RADIO AND
CD PLAYER
·SMARTPHONE
LINK DISPLAY
AUDIO
HANDS
FREE-ECU
J/C(18)
D-211
1
2
3
4
AUDIO
AMPLIFIER
DAB
TUNER

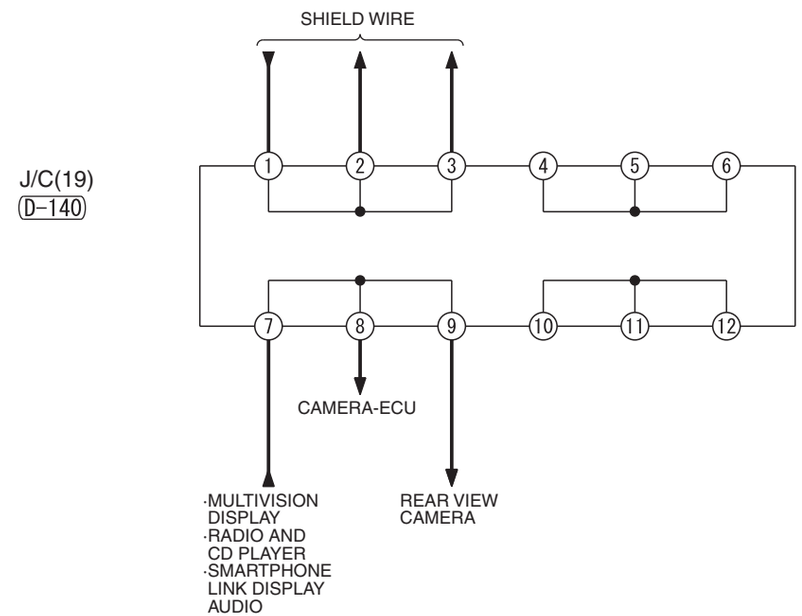
SHIELD WIRE
J/C(19)
D-140
1
2
3
4
5
6
7
8
9
10
11
12
CAMERA-ECU
·MULTIVISION
DISPLAY
·RADIO AND
CD PLAYER
·SMARTPHONE
LINK DISPLAY
AUDIO
REAR VIEW
CAMERA

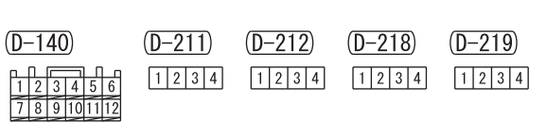
D-140
1 2 3 4 5 6
7 8 9 10 11 12
D-211
1 2 3 4
D-212
1 2 3 4
D-218
1 2 3 4
D-219
1 2 3 4