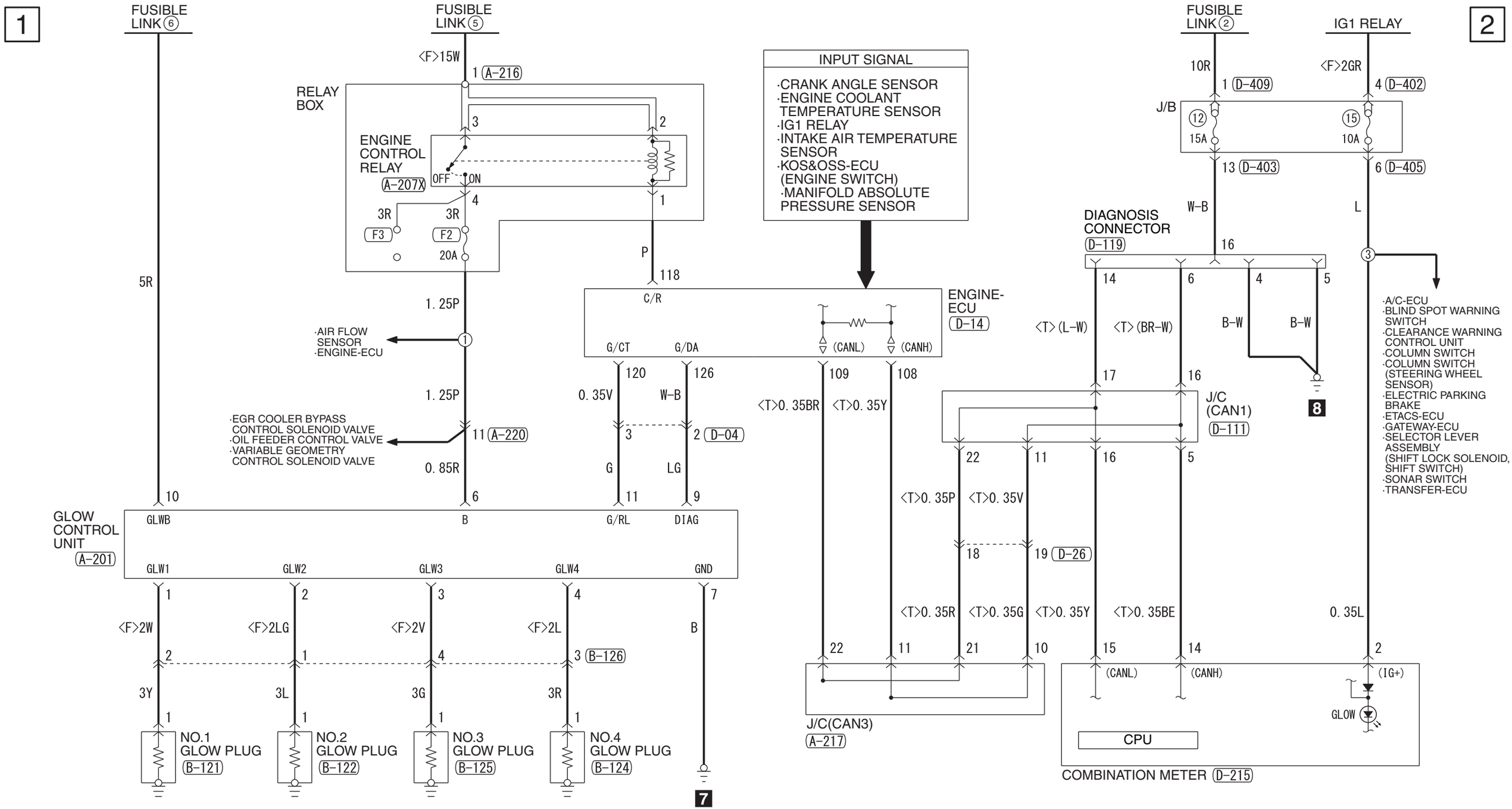
1
2
FUSIBLE LINK 6
FUSIBLE LINK 5
FUSIBLE LINK 2
IG1 RELAY
<F>15W
1 A-216
RELAY BOX
ENGINE CONTROL RELAY
A-207X
OFF
ON
3R
F3
F2
20A
5R
1.25P
·AIR FLOW SENSOR
·ENGINE-ECU
·EGR COOLER BYPASS CONTROL SOLENOID VALVE
·OIL FEEDER CONTROL VALVE
·VARIABLE GEOMETRY CONTROL SOLENOID VALVE
11 A-220
0.85R
P
118
C/R
INPUT SIGNAL
·CRANK ANGLE SENSOR
·ENGINE COOLANT TEMPERATURE SENSOR
·IG1 RELAY
·INTAKE AIR TEMPERATURE SENSOR
·KOS&OSS-ECU (ENGINE SWITCH)
·MANIFOLD ABSOLUTE PRESSURE SENSOR
ENGINE-ECU
D-14
G/CT
G/DA
(CANL)
(CANH)
0.35V
W-B
2 D-04
G
LG
<T>0.35BR
<T>0.35Y
<T>0.35P
<T>0.35V
<T>0.35R
<T>0.35G
<T>0.35Y
<T>0.35BE
0.35L
10R
<F>2GR
1 D-409
4 D-402
J/B
15A
10A
13 D-403
6 D-405
W-B
L
DIAGNOSIS CONNECTOR
D-119
<T>(L-W)
<T>(BR-W)
B-W
J/C (CAN1)
D-111
8
·A/C-ECU
·BLIND SPOT WARNING SWITCH
·CLEARANCE WARNING CONTROL UNIT
·COLUMN SWITCH
·COLUMN SWITCH (STEERING WHEEL SENSOR)
·ELECTRIC PARKING BRAKE
·ETACS-ECU
·GATEWAY-ECU
·SELECTOR LEVER ASSEMBLY (SHIFT LOCK SOLENOID, SHIFT SWITCH)
·SONAR SWITCH
·TRANSFER-ECU
GLOW CONTROL UNIT
A-201
GLWB
B
G/RL
DIAG
GLW1
GLW2
GLW3
GLW4
GND
<F>2W
<F>2LG
<F>2V
<F>2L
B
3 B-126
3Y
3L
3G
3R
NO.1 GLOW PLUG
B-121
NO.2 GLOW PLUG
B-122
NO.3 GLOW PLUG
B-125
NO.4 GLOW PLUG
B-124
7
J/C(CAN3)
A-217
CPU
COMBINATION METER D-215
GLOW
(IG+)
A-201
A-207X
A-216
A-217
MU801515
A-220
MU801855
B-121
B-122
B-124
B-125
B-126
D-04
D-14
D-26
D-111
D-119
FRONT SIDE
MU803797
D-215
AMP
D-402
MU801331
D-403
MU801857
D-405
MU801839
D-409
HHM05X00AC