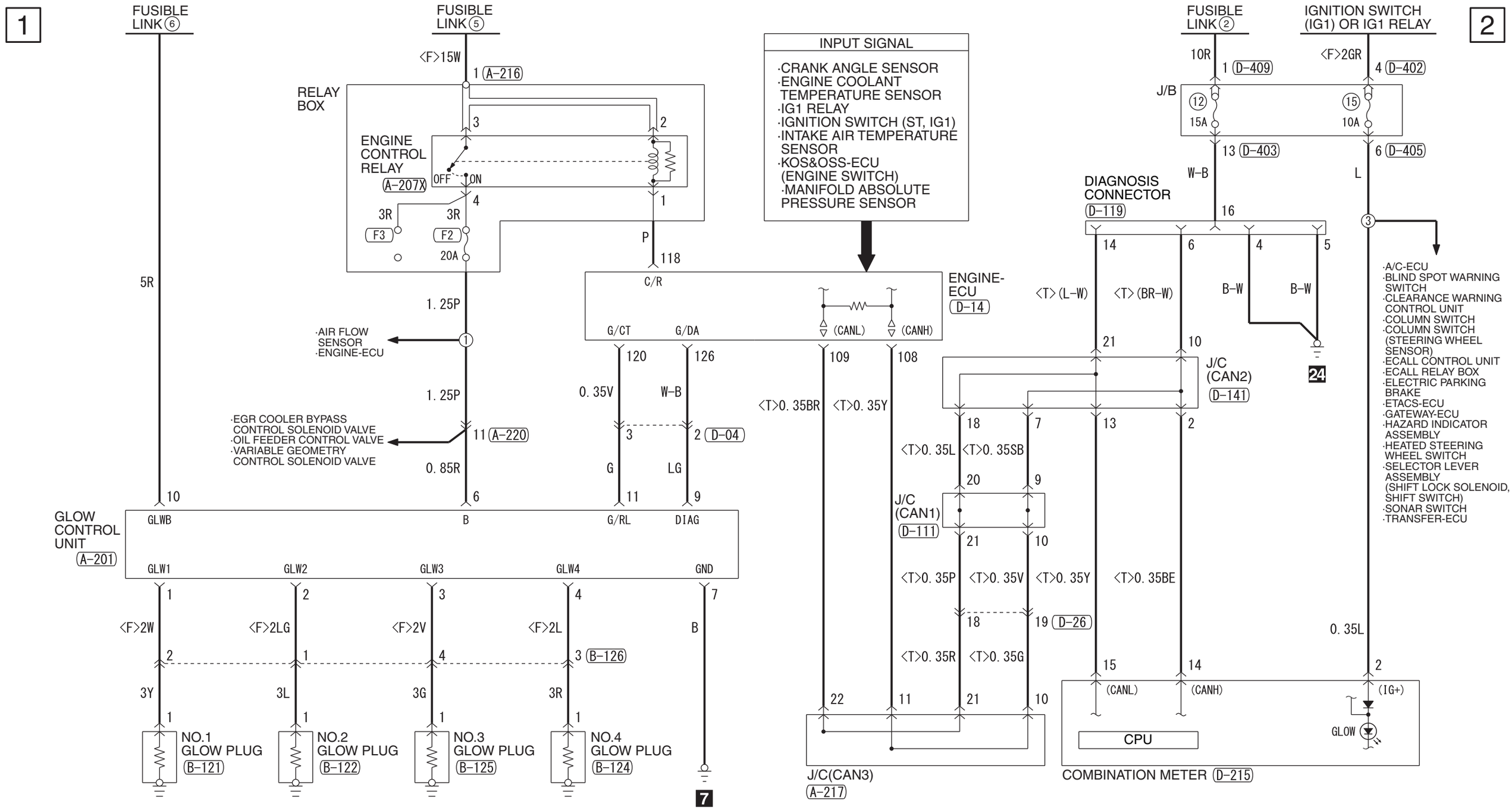
1
2
FUSIBLE LINK 6
FUSIBLE LINK 5
FUSIBLE LINK 2
IGNITION SWITCH (IG1) OR IG1 RELAY
INPUT SIGNAL
·CRANK ANGLE SENSOR
·ENGINE COOLANT TEMPERATURE SENSOR
·IG1 RELAY
·IGNITION SWITCH (ST, IG1)
·INTAKE AIR TEMPERATURE SENSOR
·KOS&OSS-ECU (ENGINE SWITCH)
·MANIFOLD ABSOLUTE PRESSURE SENSOR
RELAY BOX
ENGINE CONTROL RELAY
A-207X
OFF
ON
<F>15W
1 A-216
3R
F3
F2
20A
P
118
C/R
ENGINE-ECU
D-14
G/CT
G/DA
(CANL)
(CANH)
5R
1. 25P
·AIR FLOW SENSOR
·ENGINE-ECU
·EGR COOLER BYPASS CONTROL SOLENOID VALVE
·OIL FEEDER CONTROL VALVE
·VARIABLE GEOMETRY CONTROL SOLENOID VALVE
11 A-220
0. 85R
0. 35V
W-B
2 D-04
G
LG
<T>0. 35BR
<T>0. 35Y
GLOW CONTROL UNIT
A-201
GLWB
B
G/RL
DIAG
GLW1
GLW2
GLW3
GLW4
GND
<F>2W
<F>2LG
<F>2V
<F>2L
B
3 B-126
3Y
3L
3G
3R
NO.1 GLOW PLUG
B-121
NO.2 GLOW PLUG
B-122
NO.3 GLOW PLUG
B-125
NO.4 GLOW PLUG
B-124
7
10R
1 D-409
<F>2GR
4 D-402
J/B
15A
10A
13 D-403
6 D-405
W-B
L
DIAGNOSIS CONNECTOR
D-119
16
<T> (L-W)
<T> (BR-W)
B-W
24
J/C (CAN2)
D-141
<T>0. 35L
<T>0. 35SB
J/C (CAN1)
D-111
<T>0. 35P
<T>0. 35V
<T>0. 35Y
<T>0. 35BE
19 D-26
<T>0. 35R
<T>0. 35G
0. 35L
·A/C-ECU
·BLIND SPOT WARNING SWITCH
·CLEARANCE WARNING CONTROL UNIT
·COLUMN SWITCH
·COLUMN SWITCH (STEERING WHEEL SENSOR)
·ECALL CONTROL UNIT
·ECALL RELAY BOX
·ELECTRIC PARKING BRAKE
·ETACS-ECU
·GATEWAY-ECU
·HAZARD INDICATOR ASSEMBLY
·HEATED STEERING WHEEL SWITCH
·SELECTOR LEVER ASSEMBLY (SHIFT LOCK SOLENOID, SHIFT SWITCH)
·SONAR SWITCH
·TRANSFER-ECU
(IG+)
GLOW
CPU
J/C(CAN3)
A-217
COMBINATION METER D-215
A-201
A-207X
A-216
A-217
MU801515
A-220
MU801855
B-121
B-122
B-124
B-125
B-126
D-04
D-14
D-26
D-111
D-119
MU803797
FRONT SIDE
D-141
D-215
AMP
D-402
MU801331
D-403
MU801857
D-405
MU801839
D-409
HHM05X05AC