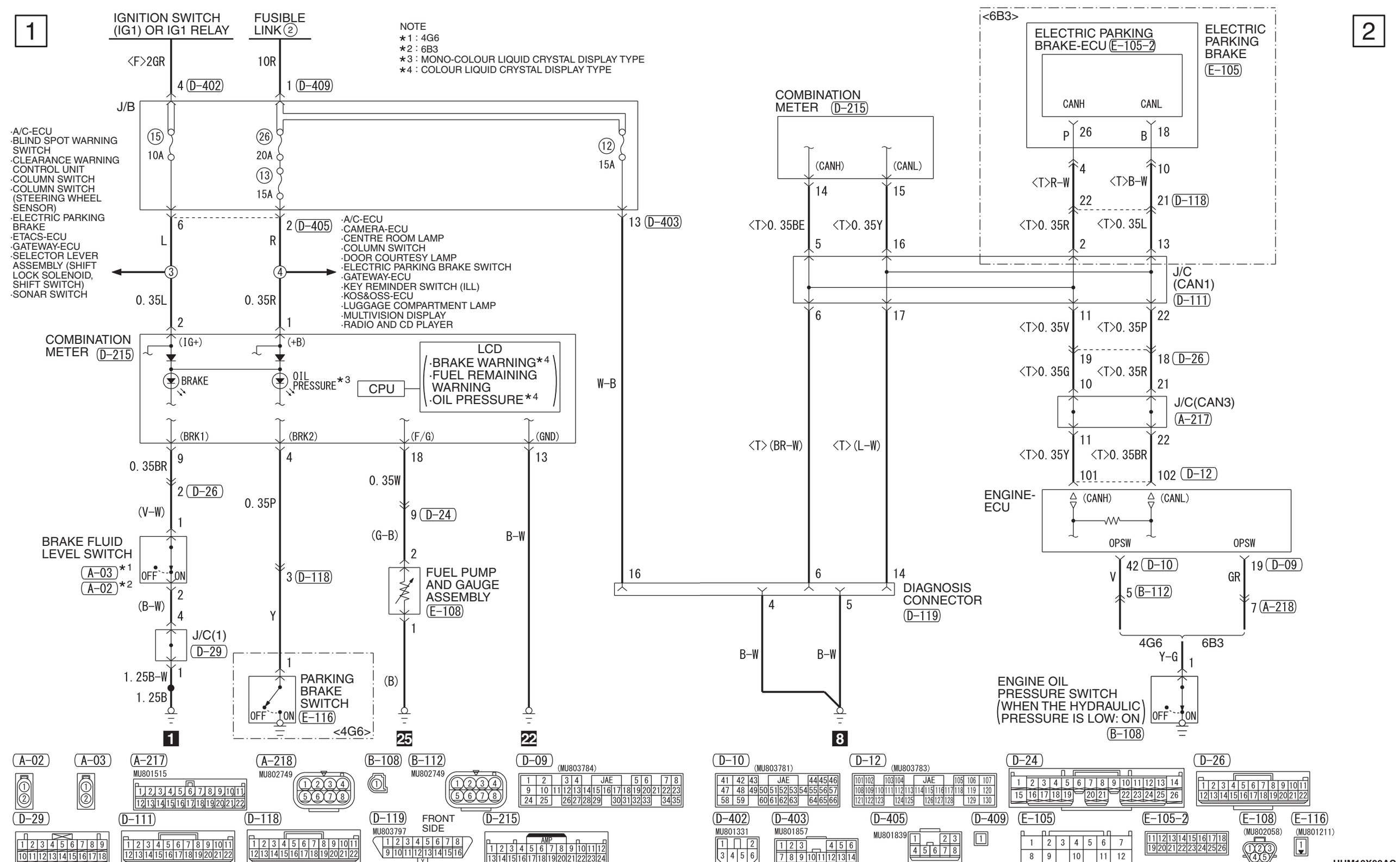
1
2
IGNITION SWITCH (IG1) OR IG1 RELAY
FUSIBLE LINK ②
NOTE
*1 : 4G6
*2 : 6B3
*3 : MONO-COLOUR LIQUID CRYSTAL DISPLAY TYPE
*4 : COLOUR LIQUID CRYSTAL DISPLAY TYPE
<F>2GR
10R
4 D-402
1 D-409
J/B
·A/C-ECU
·BLIND SPOT WARNING SWITCH
·CLEARANCE WARNING CONTROL UNIT
·COLUMN SWITCH
·COLUMN SWITCH (STEERING WHEEL SENSOR)
·ELECTRIC PARKING BRAKE
·ETACS-ECU
·GATEWAY-ECU
·SELECTOR LEVER ASSEMBLY (SHIFT LOCK SOLENOID, SHIFT SWITCH)
·SONAR SWITCH
15 10A
26 20A
13 15A
12 15A
6
2 D-405
13 D-403
L
R
3
4
·A/C-ECU
·CAMERA-ECU
·CENTRE ROOM LAMP
·COLUMN SWITCH
·DOOR COURTESY LAMP
·ELECTRIC PARKING BRAKE SWITCH
·GATEWAY-ECU
·KEY REMINDER SWITCH (ILL)
·KOS&OSS-ECU
·LUGGAGE COMPARTMENT LAMP
·MULTIVISION DISPLAY
·RADIO AND CD PLAYER
0. 35L
0. 35R
2
1
COMBINATION METER D-215
(IG+)
(+B)
BRAKE
OIL PRESSURE*3
CPU
LCD
·BRAKE WARNING*4
·FUEL REMAINING WARNING
·OIL PRESSURE*4
(BRK1)
(BRK2)
(F/G)
(GND)
W-B
0. 35BR
9
4
18
13
2 D-26
0. 35P
0. 35W
9 D-24
(V-W)
(G-B)
B-W
1
2
BRAKE FLUID LEVEL SWITCH
A-03 *1
A-02 *2
OFF
ON
3 D-118
FUEL PUMP AND GAUGE ASSEMBLY
E-108
2
4
Y
1
J/C(1)
D-29
1
1. 25B-W
1. 25B
PARKING BRAKE SWITCH
E-116
<4G6>
(B)
1
25
22
<6B3>
ELECTRIC PARKING BRAKE-ECU E-105-2
ELECTRIC PARKING BRAKE
E-105
CANH
CANL
P 26
B 18
COMBINATION METER D-215
(CANH)
(CANL)
14
15
4
10
<T>R-W
<T>B-W
22
21 D-118
<T>0. 35BE
<T>0. 35Y
<T>0. 35R
<T>0. 35L
5
16
2
13
J/C (CAN1)
D-111
6
17
11
22
<T>0. 35V
<T>0. 35P
19
18 D-26
<T>0. 35G
<T>0. 35R
10
21
J/C(CAN3)
A-217
11
22
<T>0. 35Y
<T>0. 35BR
101
102 D-12
ENGINE-ECU
(CANH)
(CANL)
OPSW
OPSW
<T> (BR-W)
<T> (L-W)
16
6
14
DIAGNOSIS CONNECTOR
D-119
4
5
B-W
B-W
V
42 D-10
5 B-112
GR
19 D-09
7 A-218
4G6
6B3
Y-G
1
ENGINE OIL PRESSURE SWITCH (WHEN THE HYDRAULIC PRESSURE IS LOW: ON)
B-108
OFF
ON
A-02
A-03
A-217
MU801515
A-218
MU802749
B-108
B-112
MU802749
D-09
(MU803784)
D-29
D-111
D-118
D-119
MU803797
FRONT SIDE
D-215
AMP
D-10
(MU803781)
D-12
(MU803783)
D-24
D-26
D-402
MU801331
D-403
MU801857
D-405
MU801839
D-409
E-105
E-105-2
E-108
(MU802058)
E-116
(MU801211)
HHM10X00AC