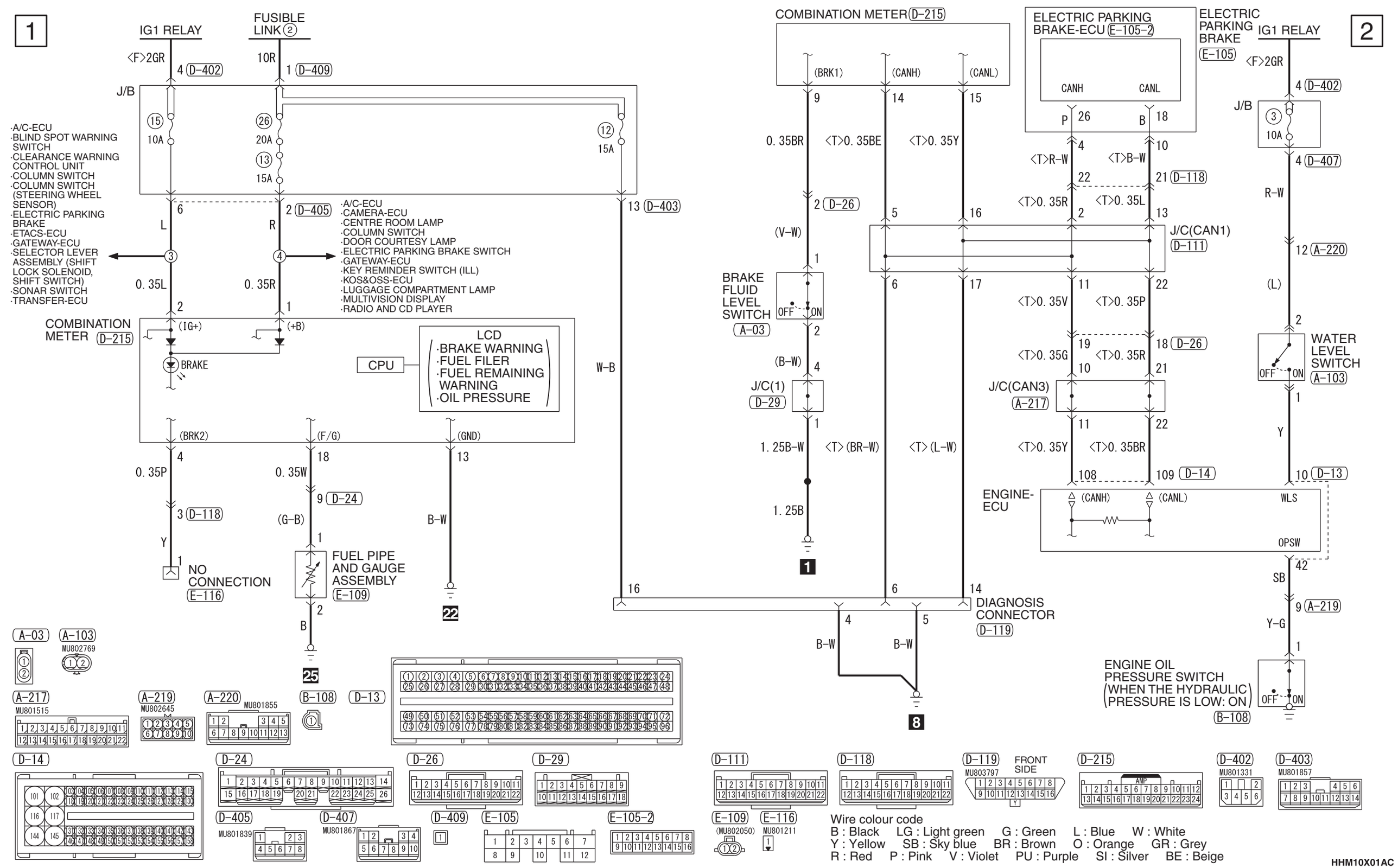
1
2
IG1 RELAY
FUSIBLE LINK (2)
<F>2GR
4 (D-402)
10R
1 (D-409)
J/B
15
10A
26
20A
13
15A
12
15A
·A/C-ECU
·BLIND SPOT WARNING SWITCH
·CLEARANCE WARNING CONTROL UNIT
·COLUMN SWITCH
·COLUMN SWITCH (STEERING WHEEL SENSOR)
·ELECTRIC PARKING BRAKE
·ETACS-ECU
·GATEWAY-ECU
·SELECTOR LEVER ASSEMBLY (SHIFT LOCK SOLENOID, SHIFT SWITCH)
·SONAR SWITCH
·TRANSFER-ECU
6
L
0. 35L
2
2 (D-405)
R
0. 35R
1
·A/C-ECU
·CAMERA-ECU
·CENTRE ROOM LAMP
·COLUMN SWITCH
·DOOR COURTESY LAMP
·ELECTRIC PARKING BRAKE SWITCH
·GATEWAY-ECU
·KEY REMINDER SWITCH (ILL)
·KOS&OSS-ECU
·LUGGAGE COMPARTMENT LAMP
·MULTIVISION DISPLAY
·RADIO AND CD PLAYER
13 (D-403)
W-B
COMBINATION METER (D-215)
(IG+)
(+B)
BRAKE
CPU
LCD
·BRAKE WARNING
·FUEL FILER
·FUEL REMAINING WARNING
·OIL PRESSURE
(BRK2)
(F/G)
(GND)
4
0. 35P
3 (D-118)
Y
1
NO CONNECTION (E-116)
18
0. 35W
9 (D-24)
(G-B)
1
FUEL PIPE AND GAUGE ASSEMBLY (E-109)
2
B
25
13
B-W
22
COMBINATION METER (D-215)
(BRK1)
(CANH)
(CANL)
9
14
15
0. 35BR
<T>0. 35BE
<T>0. 35Y
2 (D-26)
(V-W)
1
BRAKE FLUID LEVEL SWITCH (A-03)
OFF
ON
2
(B-W)
4
J/C(1) (D-29)
1
1. 25B-W
<T> (BR-W)
<T> (L-W)
1. 25B
1
16
6
14
DIAGNOSIS CONNECTOR (D-119)
4
5
B-W
B-W
8
ELECTRIC PARKING BRAKE-ECU (E-105-2)
CANH
CANL
ELECTRIC PARKING BRAKE (E-105)
P
26
B
18
4
10
<T>R-W
<T>B-W
22
21 (D-118)
<T>0. 35R
<T>0. 35L
2
13
J/C(CAN1) (D-111)
5
16
6
17
11
22
<T>0. 35V
<T>0. 35P
19
18 (D-26)
<T>0. 35G
<T>0. 35R
10
21
J/C(CAN3) (A-217)
11
22
<T>0. 35Y
<T>0. 35BR
108
109 (D-14)
ENGINE-ECU
(CANH)
(CANL)
WLS
OPSW
42
SB
9 (A-219)
Y-G
1
ENGINE OIL PRESSURE SWITCH (WHEN THE HYDRAULIC PRESSURE IS LOW: ON) (B-108)
OFF
ON
IG1 RELAY
<F>2GR
4 (D-402)
J/B
3
10A
4 (D-407)
R-W
12 (A-220)
(L)
2
WATER LEVEL SWITCH (A-103)
OFF
ON
1
Y
10 (D-13)
A-03
A-103
MU802769
A-217
MU801515
A-219
MU802645
A-220
MU801855
B-108
D-13
D-14
D-24
D-26
D-29
D-111
D-118
D-119
MU803797
FRONT SIDE
D-215
AMP
D-402
MU801331
D-403
MU801857
D-405
MU801839
D-407
MU801867
D-409
E-105
E-105-2
E-109
(MU802050)
E-116
MU801211
Wire colour code
B : Black LG : Light green G : Green L : Blue W : White
Y : Yellow SB : Sky blue BR : Brown O : Orange GR : Grey
R : Red P : Pink V : Violet PU : Purple SI : Silver BE : Beige
HHM10X01AC