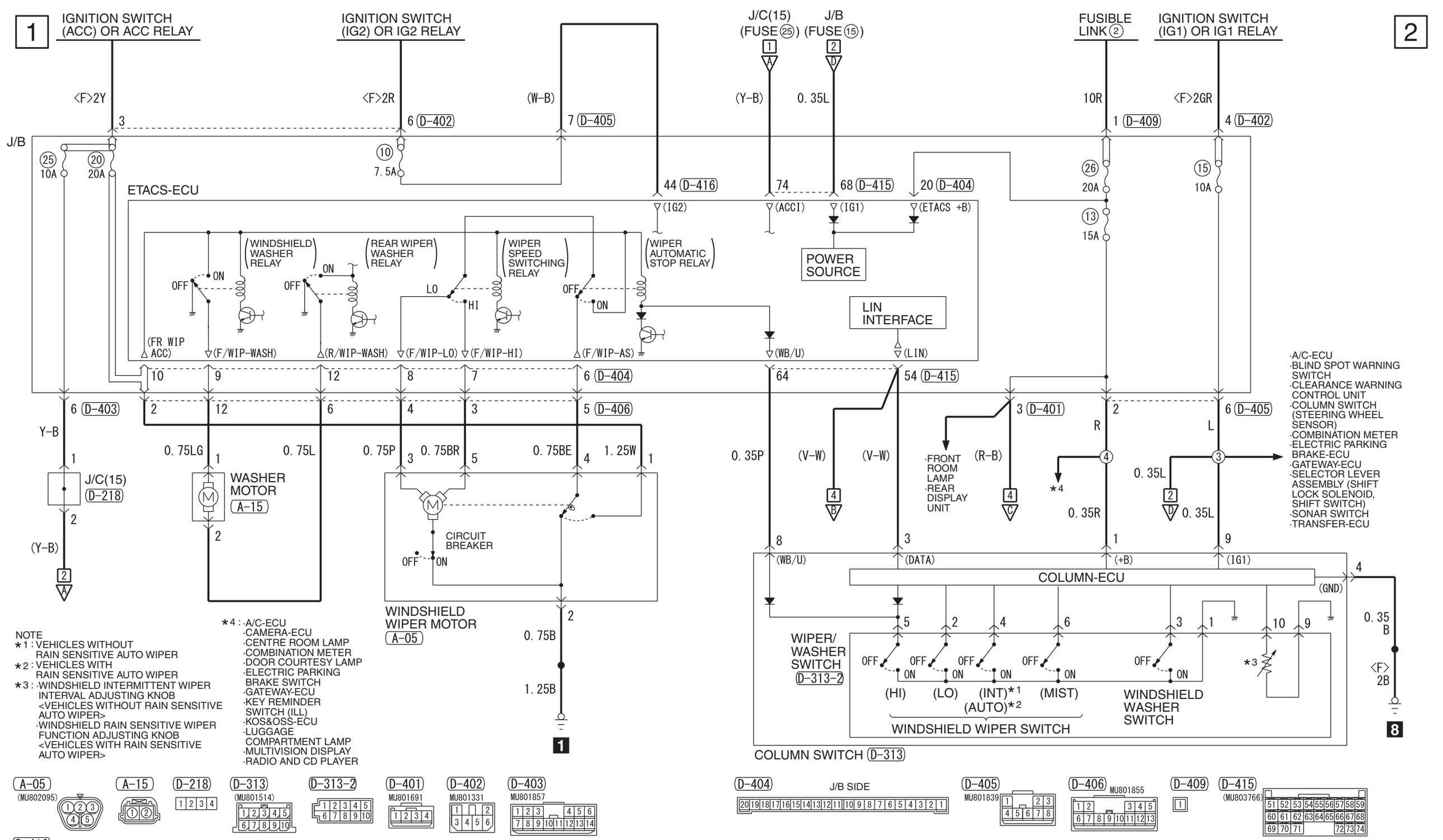

NOTE
*1 : VEHICLES WITHOUT RAIN SENSITIVE AUTO WIPER
*2 : VEHICLES WITH RAIN SENSITIVE AUTO WIPER
*3 : ·WINDSHIELD INTERMITTENT WIPER INTERVAL ADJUSTING KNOB <VEHICLES WITHOUT RAIN SENSITIVE AUTO WIPER>
·WINDSHIELD RAIN SENSITIVE WIPER FUNCTION ADJUSTING KNOB <VEHICLES WITH RAIN SENSITIVE AUTO WIPER>

*4 : ·A/C-ECU
·CAMERA-ECU
·CENTRE ROOM LAMP
·COMBINATION METER
·DOOR COURTESY LAMP
·ELECTRIC PARKING BRAKE SWITCH
·GATEWAY-ECU
·KEY REMINDER SWITCH (ILL)
·KOS&OSS-ECU
·LUGGAGE COMPARTMENT LAMP
·MULTIVISION DISPLAY
·RADIO AND CD PLAYER

Wire colour code
B : Black LG : Light green G : Green L : Blue W : White Y : Yellow SB : Sky blue BR : Brown
O : Orange GR : Grey R : Red P : Pink V : Violet PU : Purple SI : Silver BE : Beige

HHM13X03AC