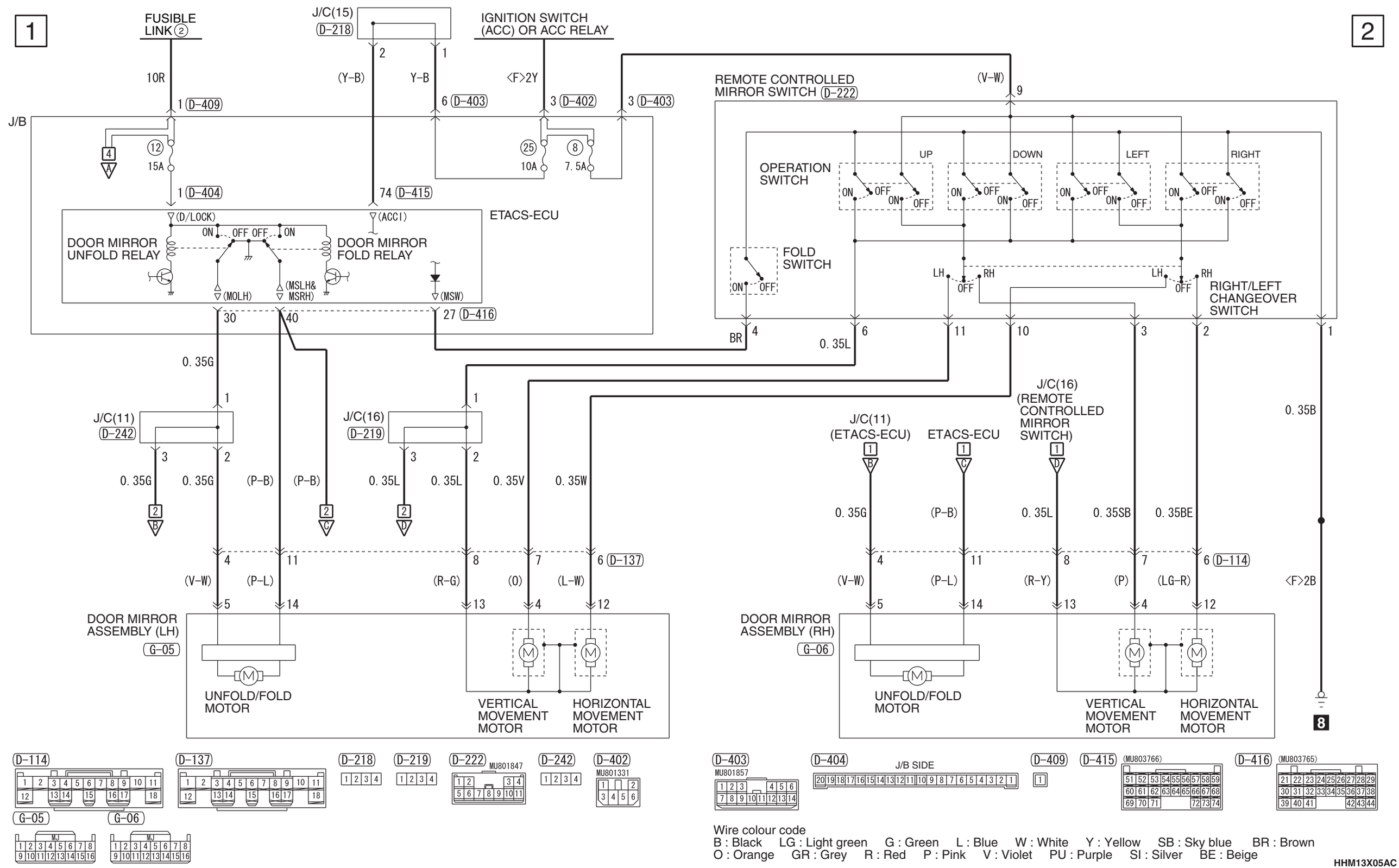
1
2
FUSIBLE LINK ②
J/C(15) D-218
IGNITION SWITCH (ACC) OR ACC RELAY
10R
(Y-B)
Y-B
<F>2Y
1 D-409
6 D-403
3 D-402
3 D-403
J/B
12
15A
25
10A
8
7.5A
1 D-404
74 D-415
ETACS-ECU
(D/LOCK)
(ACCI)
DOOR MIRROR UNFOLD RELAY
DOOR MIRROR FOLD RELAY
ON
OFF
(MOLH)
(MSLH& MSRH)
(MSW)
30
40
27 D-416
REMOTE CONTROLLED MIRROR SWITCH D-222
(V-W)
9
OPERATION SWITCH
UP
DOWN
LEFT
RIGHT
FOLD SWITCH
LH
RH
RIGHT/LEFT CHANGEOVER SWITCH
BR
4
0.35L
6
11
10
3
2
1
0.35G
J/C(11) D-242
J/C(16) D-219
J/C(16) (REMOTE CONTROLLED MIRROR SWITCH)
J/C(11) (ETACS-ECU)
ETACS-ECU
0.35B
0.35G
0.35G
(P-B)
(P-B)
0.35L
0.35L
0.35V
0.35W
0.35G
(P-B)
0.35L
0.35SB
0.35BE
6 D-137
6 D-114
(V-W)
(P-L)
(R-G)
(O)
(L-W)
(V-W)
(P-L)
(R-Y)
(P)
(LG-R)
<F>2B
5
14
13
4
12
DOOR MIRROR ASSEMBLY (LH)
G-05
UNFOLD/FOLD MOTOR
VERTICAL MOVEMENT MOTOR
HORIZONTAL MOVEMENT MOTOR
DOOR MIRROR ASSEMBLY (RH)
G-06
8
D-114
D-137
D-218
D-219
D-222
MU801847
D-242
D-402
MU801331
D-403
MU801857
D-404
J/B SIDE
D-409
D-415
(MU803766)
D-416
(MU803765)
G-05
G-06
MJ
Wire colour code
B : Black LG : Light green G : Green L : Blue W : White Y : Yellow SB : Sky blue BR : Brown
O : Orange GR : Grey R : Red P : Pink V : Violet PU : Purple SI : Silver BE : Beige
HHM13X05AC