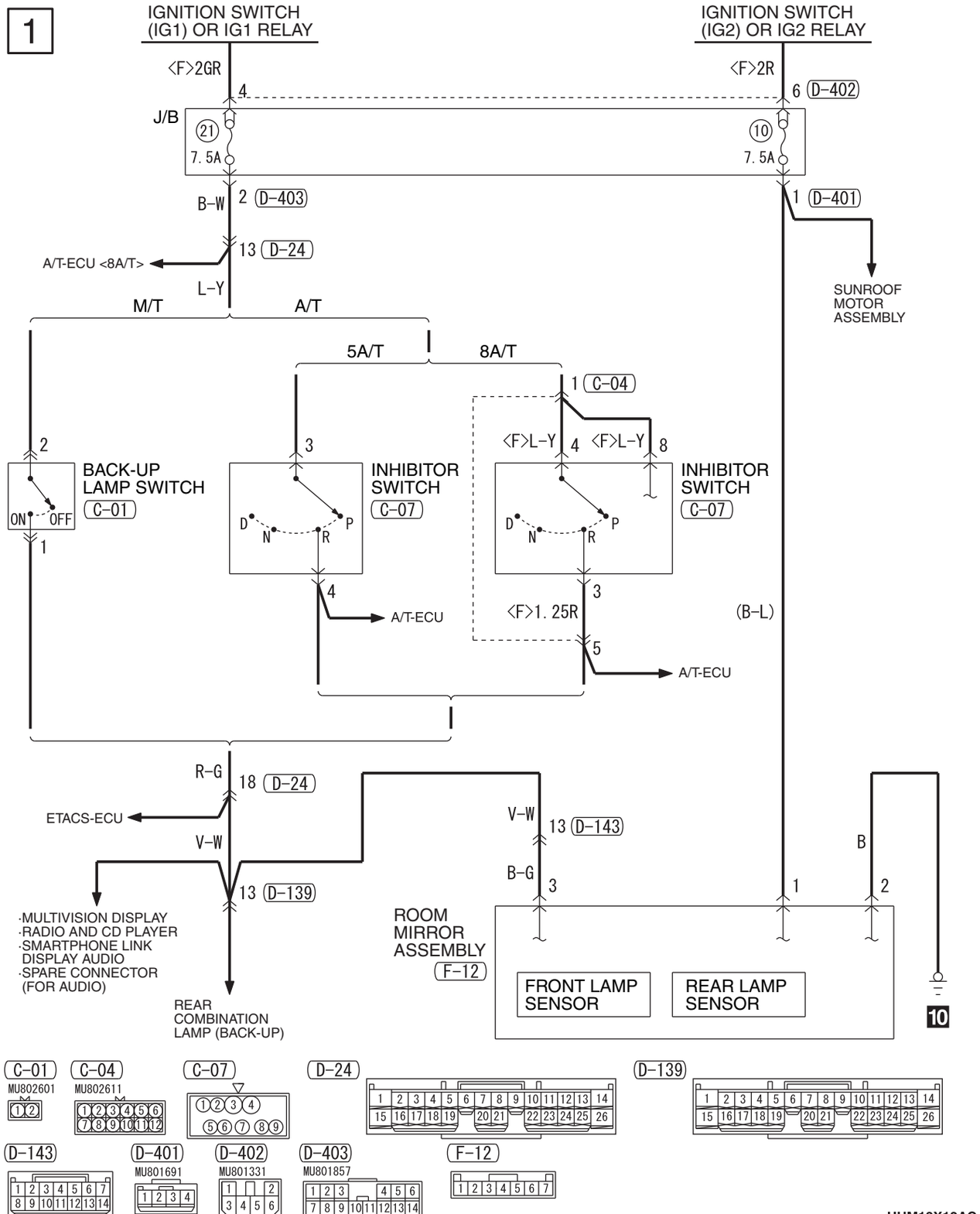
1
IGNITION SWITCH (IG1) OR IG1 RELAY
IGNITION SWITCH (IG2) OR IG2 RELAY
<F>2GR
<F>2R
4
6 D-402
J/B
21
10
7.5A
7.5A
B-W
2 D-403
1 D-401
13 D-24
A/T-ECU <8A/T>
L-Y
SUNROOF MOTOR ASSEMBLY
M/T
A/T
5A/T
8A/T
1 C-04
2
3
<F>L-Y
4
<F>L-Y
8
BACK-UP LAMP SWITCH
C-01
ON
OFF
INHIBITOR SWITCH
C-07
D
N
R
P
INHIBITOR SWITCH
C-07
1
4
A/T-ECU
3
<F>1.25R
(B-L)
5
A/T-ECU
R-G
18 D-24
ETACS-ECU
V-W
V-W
13 D-143
B
B-G
3
1
2
13 D-139
·MULTIVISION DISPLAY
·RADIO AND CD PLAYER
·SMARTPHONE LINK DISPLAY AUDIO
·SPARE CONNECTOR (FOR AUDIO)
REAR COMBINATION LAMP (BACK-UP)
ROOM MIRROR ASSEMBLY
F-12
FRONT LAMP SENSOR
REAR LAMP SENSOR
10
C-01
MU802601
C-04
MU802611
C-07
D-24
D-139
D-143
D-401
MU801691
D-402
MU801331
D-403
MU801857
F-12

HHM13X12AC