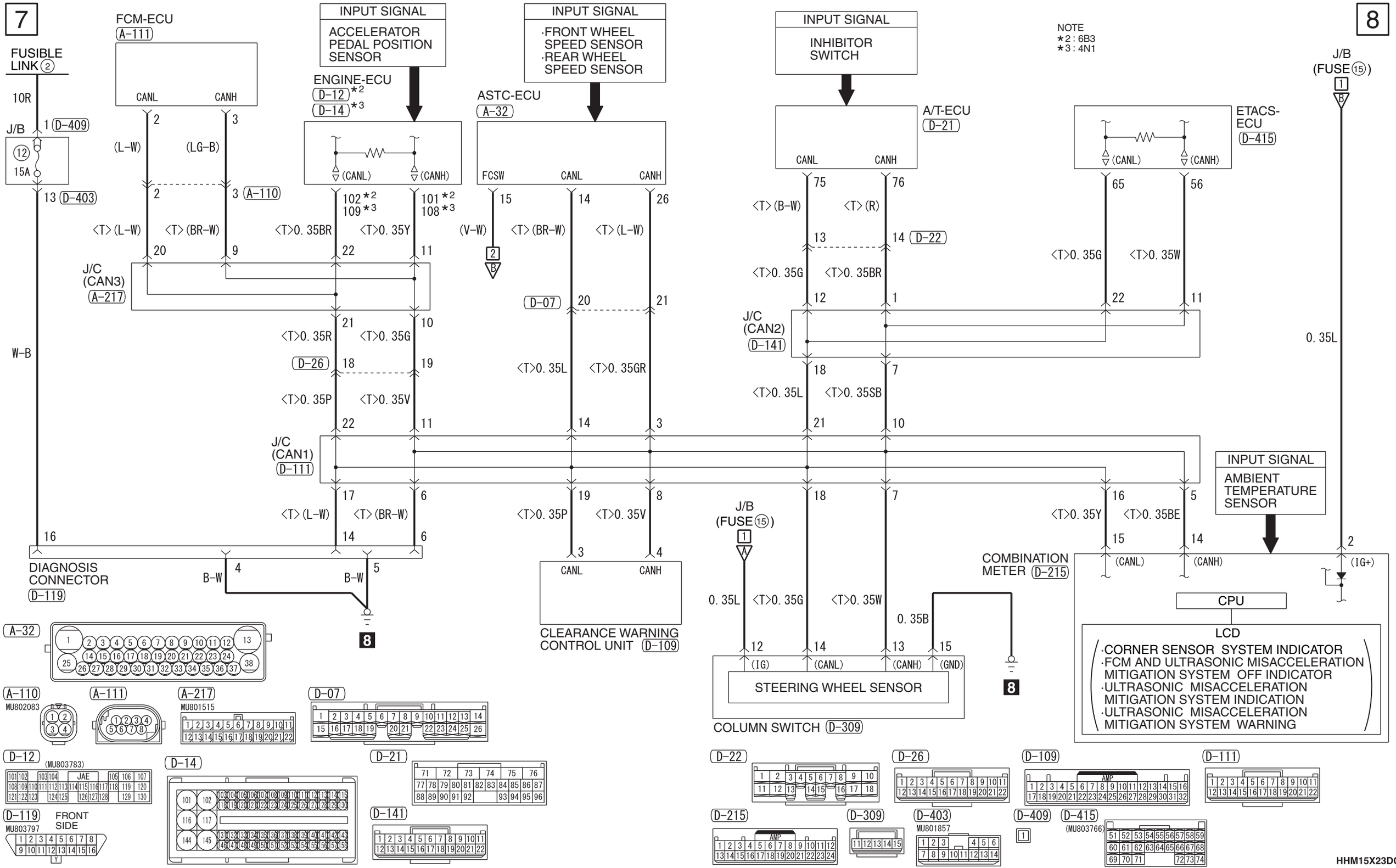
7
8
FUSIBLE LINK ②
10R
J/B
1 D-409
12
15A
13 D-403
FCM-ECU
A-111
CANL
CANH
2
3
(L-W)
(LG-B)
2
3 A-110
<T> (L-W)
<T> (BR-W)
20
9
INPUT SIGNAL
ACCELERATOR PEDAL POSITION SENSOR
ENGINE-ECU
D-12 *2
D-14 *3
(CANL)
(CANH)
102 *2
109 *3
101 *2
108 *3
<T>0. 35BR
<T>0. 35Y
22
11
J/C (CAN3)
A-217
21
10
<T>0. 35R
<T>0. 35G
D-26
18
19
<T>0. 35P
<T>0. 35V
22
11
INPUT SIGNAL
·FRONT WHEEL SPEED SENSOR
·REAR WHEEL SPEED SENSOR
ASTC-ECU
A-32
FCSW
CANL
CANH
15
14
26
(V-W)
<T> (BR-W)
<T> (L-W)
2
B
D-07
20
21
<T>0. 35L
<T>0. 35GR
14
3
INPUT SIGNAL
INHIBITOR SWITCH
A/T-ECU
D-21
CANL
CANH
75
76
<T> (B-W)
<T> (R)
13
14 D-22
<T>0. 35G
<T>0. 35BR
12
1
J/C (CAN2)
D-141
18
7
<T>0. 35L
<T>0. 35SB
21
10
NOTE
*2 : 6B3
*3 : 4N1
ETACS-ECU
D-415
(CANL)
(CANH)
65
56
<T>0. 35G
<T>0. 35W
22
11
J/B (FUSE ⑮)
1
B
0. 35L
2
J/C (CAN1)
D-111
17
6
<T> (L-W)
<T> (BR-W)
14
6
19
8
<T>0. 35P
<T>0. 35V
3
4
CANL
CANH
CLEARANCE WARNING CONTROL UNIT D-109
18
7
<T>0. 35L
<T>0. 35SB
21
10
16
5
<T>0. 35Y
<T>0. 35BE
15
14
(CANL)
(CANH)
INPUT SIGNAL
AMBIENT TEMPERATURE SENSOR
2
(IG+)
16
DIAGNOSIS CONNECTOR
D-119
B-W
4
B-W
5
8
J/B (FUSE ⑮)
1
A
0. 35L
<T>0. 35G
<T>0. 35W
0. 35B
12
14
13
15
(IG)
(CANL)
(CANH)
(GND)
STEERING WHEEL SENSOR
COLUMN SWITCH D-309
8
COMBINATION METER D-215
CPU
LCD
·CORNER SENSOR SYSTEM INDICATOR
·FCM AND ULTRASONIC MISACCELERATION MITIGATION SYSTEM OFF INDICATOR
·ULTRASONIC MISACCELERATION MITIGATION SYSTEM INDICATION
·ULTRASONIC MISACCELERATION MITIGATION SYSTEM WARNING
A-32
A-110
MU802083
A-111
A-217
MU801515
D-07
D-12
(MU803783)
JAE
D-14
D-21
D-119
MU803797
FRONT SIDE
D-141
D-22
D-26
D-109
AMP
D-111
D-215
AMP
D-309
D-403
MU801857
D-409
D-415
(MU803766)
HHM15X23DC