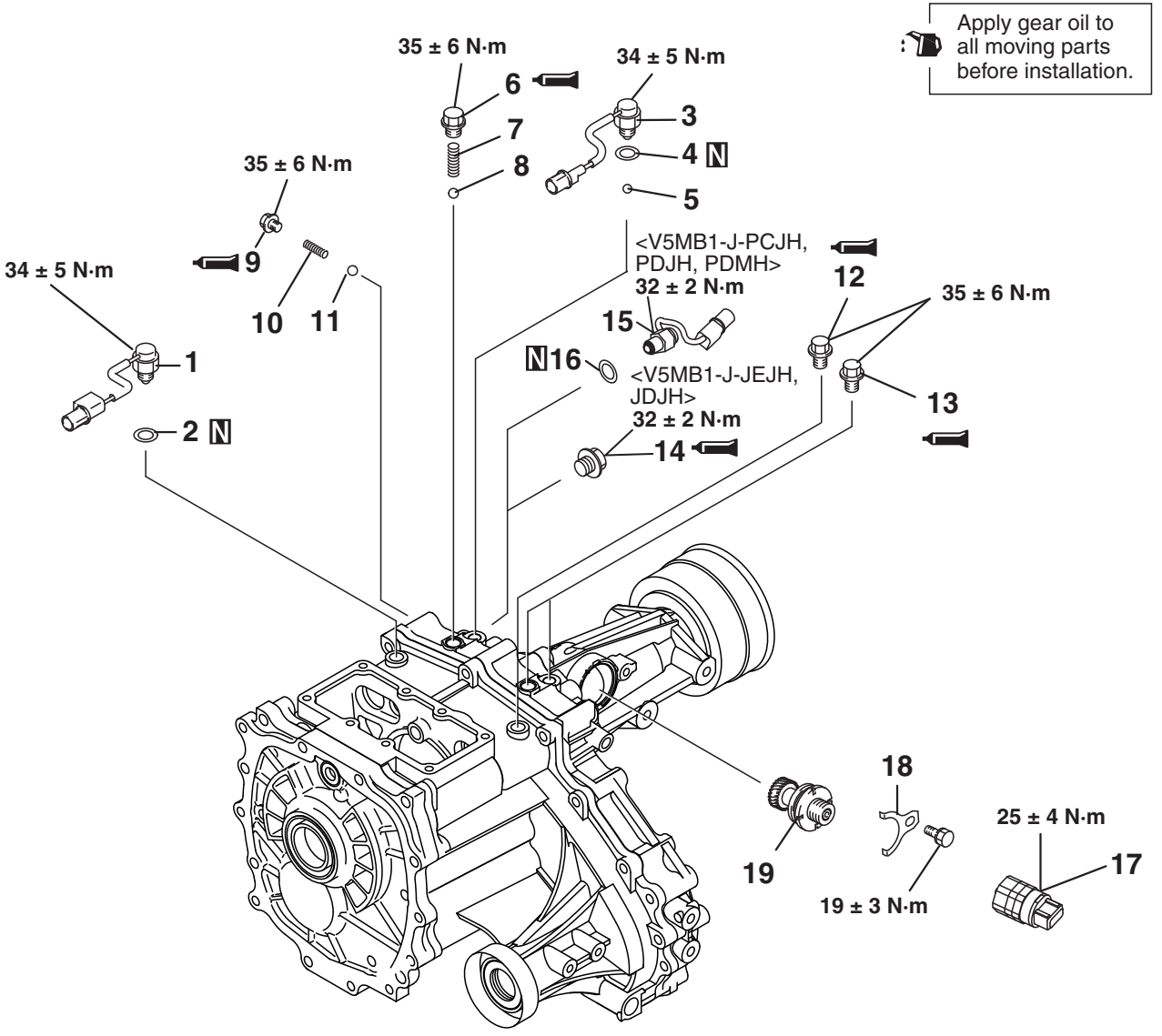
Apply gear oil to all moving parts before installation.
35 ± 6 N·m
6
7
8
34 ± 5 N·m
3
4 N
5
35 ± 6 N·m
9
10
11
34 ± 5 N·m
1
2 N
<V5MB1-J-PCJH, PDJH, PDMH>
32 ± 2 N·m
15
12
35 ± 6 N·m
13
N16
<V5MB1-J-JEJH, JDJH>
32 ± 2 N·m
14
18
19
19 ± 3 N·m
25 ± 4 N·m
17

ACE02589 AB