7

NOTE
*1 : ·A/C-ECU
·CLOCK
·COMBINATION METER
·CRUISE CONTROL SWITCH
·GLOVE BOX LAMP
·HAZARD WARNING LAMP SWITCH
·HEADLAMP MANUAL LEVELLING SWITCH
·RADIO AND CD PLAYER
·SELECTOR LEVER ASSEMBLY
·SPARE CONNECTOR (FOR AUDIO)
·STEERING WHEEL MULTI-FUNCTION SWITCH

*2 : ·A/C-ECU
·ASC OFF SWITCH
·COMBINATION METER
·CRUISE CONTROL SWITCH
·HAZARD INDICATOR ASSEMBLY
·HEADLAMP MANUAL LEVELLING SWITCH
·MULTIVISION DISPLAY
·RADIO AND CD PLAYER
·SPARE CONNECTOR (FOR AUDIO)
·STEERING WHEEL MULTI-FUNCTION SWITCH

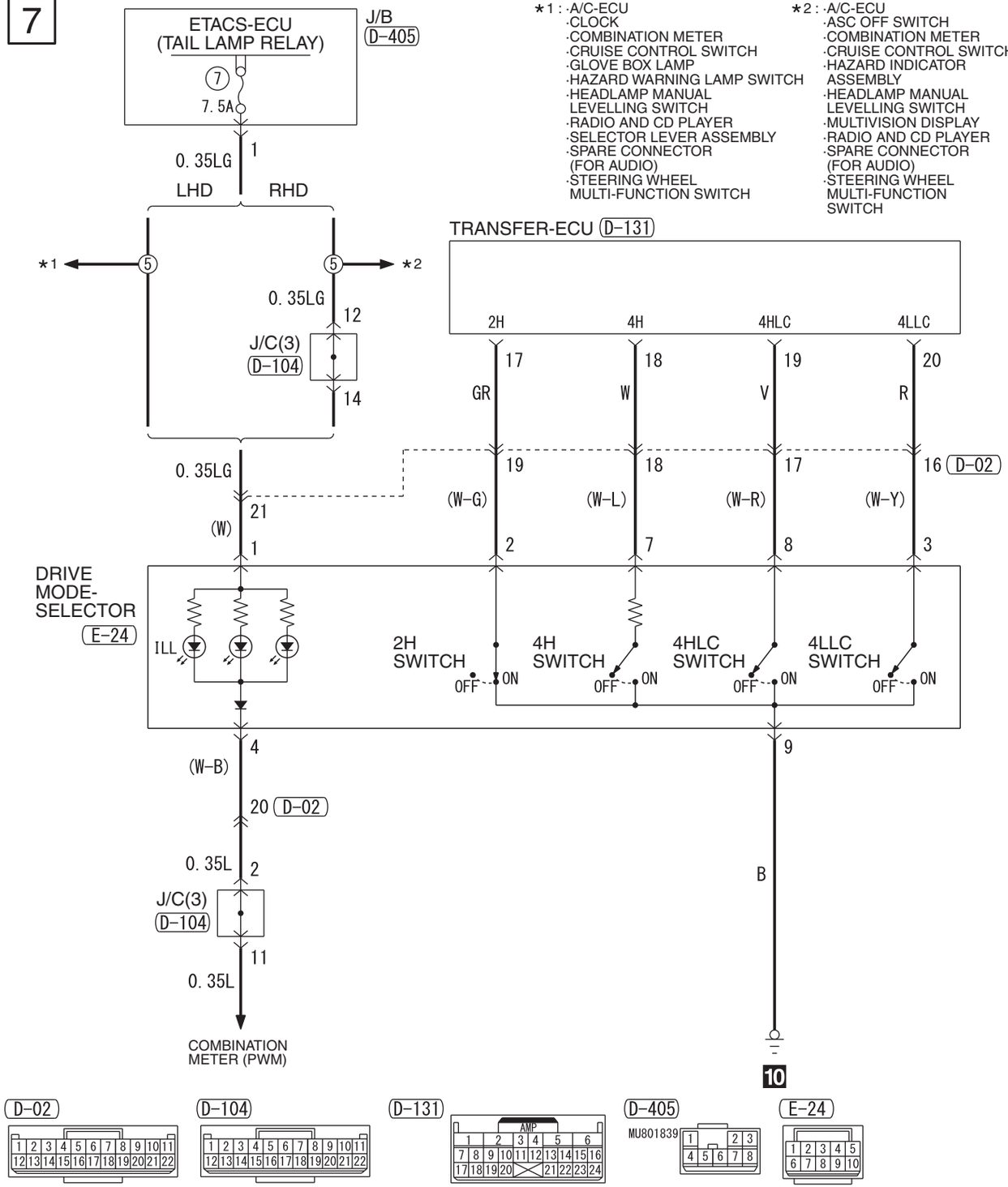

Wire colour code
B : Black LG : Light green G : Green L : Blue W : White Y : Yellow SB : Sky blue BR : Brown
O : Orange GR : Grey R : Red P : Pink V : Violet PU : Purple SI : Silver BE : Beige

HGC15X17DC